Calhoun: The NPS Institutional Archive

DSpace Repository

Theses and Dissertations | 1. Thesis and Dissertation Collection, all items

2000

Value engineering in government and private sector construction

Simpkins, William J.

Monterey California. Naval Postgraduate School

http://hdl.handle.net/10945/37783

This publication is a work of the U.S. Government as defined in Title 17, United States Code, Section 101. Copyright protection is not available for this work in the United States.

Downloaded from NPS Archive: Calhoun

Calhoun is the Naval Postgraduate School's public access digital repository for research materials and institutional publications created by the NPS community. Calhoun is named for Professor of Mathematics Guy K. Calhoun, NPS's first appointed -- and published -- scholarly author.

Dudley Knox Library / Naval Postgraduate School
411 Dyer Road / 1 University Circle
Monterey, California USA 93943

http://www.nps.edu/library

Value Engineering in Government and Private Sector Construction

William J. Simpkins

DISTRIBUTION STATEMENT A
Approved for Public Release
Distribution Unlimited

A REPORT PRESENTED TO THE GRADUATE COMMITTEE OF THE DEPARTMENT OF CIVIL ENGINEERING IN PARTIAL FULLFILLMENT OF THE REQUIREMENT FOR THE DEGREE OF MASTER OF ENGINEERING

UNIVERSITY OF FLORIDA

Summer 2000

DTIC QUALITY INSPECTED 4

20001027 043

TABLE OF CONTENTS

ABSTRACT **1**
CHAPTER ONE **3**
Value Engineering Overview 3
Defining Value Engineering 3
Value 4
History of Value Engineering in Government 6
Value Engineering in the Private Sector 7
Value Engineering in Practice 7
Value Management 9
CHAPTER TWO **11**
Government Agency Profiles 11
Naval Facilities Engineering Command 11
Atlantic Division, Naval Facilities Engineering Command 14
Southern Division, Naval Facilities Engineering Command 15
U.S. Army Corps of Engineers 16
Jacksonville District, U.S. Army Corps of Engineers 17
Private Company Profiles 18
Holder Construction Company 18
PPI Construction Management 19
Metric Constructors Inc 19
CHAPTER THREE **21**
Current Use Of Value Engineering 21
Public Contracts 21
Value Engineering Contractor Proposals (VECP) 22
Value Engineering Studies 23
Southern Division, Naval Facilities Engineering Command 23
Atlantic Division, Naval Facilities Engineering Command 26
Functional Analysis Concept Development (FACD) 26
Jacksonville District, U.S. Army Corps of Engineers 29
OVEST 30
Private Contractors 31
Holder Construction Company 32
PPI Construction Management 32
Metric Constructors Inc 35
CHAPTER FOUR **37**
Success Stories 37
Government Agencies 37
Private Contractors 45
CONCLUSIONS AND RECOMMENDATIONS **50**
Conclusions 50
Recommendations 51

REFERENCES **Ref-1**

BIBLIOGRAPHY----------Bib-1
APPENDIX A
Approved Southern Division VE Proposals

ABSTRACT

Value engineering enjoys widespread use throughout the Federal Government and in the private sector. The many billions of dollars saved over the years is a tribute to the effectiveness of applying value engineering methodology to construction projects. The Federal Acquisition Regulations require the use of value engineering in all Federal construction contracts with working estimates of $100,000.00 or more. Many private construction management firms offer value engineering as a part of their pre-construction package of services.

This report looks at the similarities and differences of value management programs practiced in the construction management industry today through a comparative look at three major Federal Government acquisition agencies with construction management responsibilities and three large scale private construction firms in the southeastern United States offering Construction Management (CM) services to their clients.

The Federal Government has very stringent regulation and guidelines for executing their value management programs. The private firms in this study, on the other hand, appear to do a great job in the area of value management but do not rely as much on regulations and guidelines and more on practical experience and lessons learned.

One area in which the Navy is utilizing value management methodology in a unique way is with the Functional Analysis Concept Development (FACD) workshops. These workshops use VE techniques to better define the scope of a proposed project prior to any design efforts.

The FACD team consist of representatives of the owner, A&E firm, end user, and the construction management agency. The workshops can be used in conjunction with any acquisition strategy including design-build and have produced award winning designs and completed projects for the clients and customers of Naval Facilities Engineering Command (NAVFACENGCOM).

Value engineering proposal databases are capturing a tremendous amount of value added construction materials and methods that can be used on projects of similar scope. With this information at the designers' fingertips, the result should be higher quality designs leaving the drafting tables. This could be especially useful in projects of smaller dollar value that do not justify a full-blown VE study.

Value Engineering has been around, in America, since the 1940s and it is still evolving and being improved upon, which should not be surprising since process improvement is at the heart of any value management philosophy.

CHAPTER ONE

Value Engineering Overview

Value engineering and cost engineering are very often used erroneously interchangeably. Value engineering in fact is a sub-category of cost engineering in that; one aspect of value engineering is certainly to look at cost and means to produce the same or better outcome at a lower cost to the owner. To understand value you must first understand cost and the two major categories of cost as they relate to construction management.

The first category is initial cost. This category of cost is what most owners use to develop a budget for a project. This cost is very simply how much the project is going to cost to plan, design, construct, and occupy. Initial cost is very important to the development of a project and the industry as a whole is pretty good at establishing a reliable estimate of these costs. Cost engineers are generally very good at creating a target budget, tracking potential changes, and controlling this budget. Life cycle cost (LCC), the second category of cost we will discuss, is probably the least understood and the most important to an owner. LCC includes the costs for planning, design, construction, occupation, utility costs, maintenance, repair, and ultimately demolition or disposal. In value engineering these are the costs that are taken into consideration when making value recommendations.

Defining Value Engineering

Value engineering is defined as the systematic application of recognized techniques by multi-disciplined teams which identify the function of a product or service;
establish a worth for that function; generates alternatives through the use of creative thinking; and provides the needed function, reliabilities, at the lowest **overall cost** or Life Cycle Cost.[1]

This is but one definition of which there can be many as long as the following precepts are included:

Organized review

Function oriented approach

Creative thinking

Overall Cost

Naval Facilities Engineering Command's Southern Division (SOUTHDIV) simply defines Value engineering as a function-oriented, systematic team approach to improve the value of a product, system or service.

Value

As you can see the definition is not as critical as the true understanding of value. Webster even has a hard time defining value. There are several similar attempts ranging from "a fair return or equivalent in goods, services or money for something exchanged" to "to rate or scale the usefulness, importance or general worth." What is illustrated here is the difficulty in determining value.

Value often is defined by the expectations of the owner. As professional engineers, architects, and construction contractors, we are obligated to provide a certain level of quality in our products.

Often times we recommend methods and materials that we feel add value to a project or process but if we cannot convey our enthusiasm for the recommendation to the owner, he does not see value added therefore the recommendation is not used.

Value, simply stated, is the best product or service producible at the lowest overall cost to the owner, or as The Society of American Value Engineers defines value; the lowest cost to reliably provide the required functions at the desired time and place with the essential quality and other performance factors to meet user requirements.

In any project there are at least four different types of value. They are:

Cost Value. This is the amount of money that must be spent to produce or procure an item

Exchange Value. This is the value of an item on the open market should you try to buy or sell it.

Use Value. This is the value of an item to the user because of the function or service it provides.

Esteem Value. This is a value "in the eye of the beholder" or a consequential value derived from some investment.[2]

As you can see, you cannot do a true cost engineering analysis without considering value, for instance; a cost engineering recommendation may be to eliminate CMU interior walls and replace them with 3/8" sheet rock for a savings of $250, 000.00 in a military barracks. Some owners may think this is great and accept this recommendation immediately, however, if they were given all of the information on life cycle cost they would see that over a 50 year useful life the sheetrock would require much more annual maintenance and several repairs due to damage and at the end of the 50 years you would have to pay to dispose of the sheetrock where the CMU block wall is virtually indestructible, requiring little or no repairs and could be recycled and reused at the end of 50 years. The life cycle analysis may very well show that the CMU wall provides the most value to the owner and should remain in the design.

History of Value Engineering in Government

Now that we have attempted to define value and value engineering, let's look at the beginnings of the practice to determine why we began to use it, how it was used, and compare what we do today in the guise of value engineering to what was done in the early days.

World War II brought about shortages in some manufacturing materials, which, in turn, caused changes in the way we manufactured goods and provided services. This caught the eye of Mr. Harry Erlicker, Vice President of Purchasing for the General Electric Company. He noticed that often the result of this material substitution was lower cost and improved products. Wanting to capitalize on this process, he assigned an engineer, Mr. Larry Miles the task of "finding a more effective way to improve a product's value."[1] Mr. Miles began his work, which he called "Value Analysis" (VA), in 1947. By 1952 this process began to grow throughout industry.

In 1954, in an effort to reduce the cost of shipbuilding, the U.S. Navy Bureau of Ships (BUSHIPS) obtained training in VA from General Electric. The Navy directed its effort at cost avoidance during the design phase and called their program Value Engineering.[1]

Since that time, several important VE milestones have taken place in Public sector Contracting. Some of these milestones include:

1959—The Society of Value Engineers founded dedicated to the advancement of value engineering.

1961—VE clauses were established in Armed Forces Procurement Regulations permitting contractor incentive sharing in VE contract cost reductions.

1962—Department of Defense made VE incentive clauses a prerequisite for all procurement contracts over $100,000.00

1963—The Navy was the first agency to write an incentive clause into an awarded contract.[1]

Almost immediately, the Government went from applying the VE process during design to making the process an incentive for construction contractors.

I will discuss this program in a later chapter. The Navy, today, still uses the VE incentive clause in their contracts and also provides a value engineering pre-award service on some projects.

Value Engineering in the Private Sector

Value engineering is usually part of the pre-award service that the vast majority of construction management firms offer. The cost to the owner is usually between 1% and 1.5 % of the estimated cost of construction and is not included in the guaranteed maximum price (GMP), according to Mr. David Wood of Preconstruction Services, PPI Construction Management. Mr. Wood says that the compensation for this service does not always fall neatly into a percentage of cost category due to the nature of the VE study. For instance, a $300,000 general education facility does not require a substantially greater amount of VE effort than does a similar project of much larger scope, say $3,000,000. On the other hand, a relatively small Chemistry laboratory could require much more effort than a larger general education facility. According to Mr. Wood, their average break even cost for pre-award services including value engineering is between $70,000 and $80,000.

Value Engineering in Practice

The Society of American Value Engineers (SAVE) is an international organization dedicated to the advancement of Value Engineering.

SAVE offers a wide variety of educational and professional services to members and non-members.

Among these services are certification programs for individuals who want to pursue a career as value engineering professional. Typical profiles of SAVE certified value professionals are outline as follows:

VALUE PROFESSIONAL PROFILE

VALUE PROGRAM MANAGER (VPM)

Reports to:	General Manager or member of Executive Staff
Education:	4-year college degree or 5 years relevant experience Module I Value Methodology Workshop or equivalent Module II Advanced Seminar
Experience:	3 years (minimum) in specialized industry or government 2 years in Value Methodology
Qualifications:	Technical Aptitude Team Leadership Skills Effective Communicator Understands Manufacturing, Procurement, Contracts, Costs Training Aptitude
Personality:	Leader Resourceful Communicator

VALUE PRACTITIONER

Reports to:	Value Program Manager
Education:	4-year college degree or 5 years relevant experience Module I Value Methodology Workshop or equivalent
Experience:	3 years (minimum) in specialized industry or government
Qualifications:	Technical Aptitude Creative Effective Communicator Understanding of Manufacturing/Construction, Procurement, Subcontracting, and Costs

The real worth of a value engineering study is in the benefits derived from the alternative materials and methods discovered during the study.

A widely held belief by both public and private sector project managers is that the value engineering study, many times, is nothing more than a scope reduction, initial cost cutting exercise to bring a project back within a pre-determined budget. There is a market for this type of construction project review but it should not be mistaken for a VE study. If true value engineering is to continue to be a value-adding element to preconstruction project management, we must convince owners to believe in the total value of the alternative and not merely the initial cost savings or increase.

Value Management

The term value management describes the various opportunities to insert value into a project. This begins with the conceptual design. During this phase of the project, designers, owners, and construction managers use their past experience and knowledge to develop a project that meets the owner's requirements and incorporates any value-added items that have been identified in previous VE studies. Next there should be a formal Value Engineering Study completed. This in depth study looks at each system of the project in a structured systematic manner to identify what required functions can be performed in a more valuable manner. This could include different materials, building methods, or total elimination of the item if not necessary to meet functional requirements. Every VE study must have a Value Engineering Job Plan. A typical VE job plan consists of 8 steps or phases. These phases are:

1. **Selection**—What system or systems will you investigate
2. **Investigation**— Acquire full knowledge of the project and systems to assess their major functions, cost, and relative worth.

3. **Speculation**— Using Creative thinking tools and techniques, consider all alternatives to functional requirements. Your ultimate alternatives will likely be introduced here although it will require much work to definitize their worth.

4. **Evaluation**—Analyze the results of the investigation phase, eliminate the obvious no-value-added alternatives and determine the alternatives that warrant further, in-depth, expansion

5. **Development**—Collect all required information about the promising alternatives, prepare cost estimates, initial design, and compute life cycle cost data. Use all of this information to ensure your alternatives will add value to the project.

6. **Presentation**—Sell your ideas to the owners and principal parties affected by your alternatives. This phase is critical because if you cannot convince your clients to adopt your alternatives, they will not be used and your efforts will have been wasted.

7. **Implementation**—Assure approved proposals are rapidly implemented into the design. Many times great ideas never get off of the ground because of the lack of an implementation plan.

8. **Audit**—Develop a plan to assure the desired results have been attained, also capture all successful alternatives to a data base for future use.

The next step in value management is what is more accurately called a value analysis. This tool enables the construction contractors to review the plans and specifications and submit any alternative means or methods they feel will add value and lower cost of construction. The owner and his representatives should evaluate these proposals and, if accepted, the contractor shares in the savings his ideas have induced. Value management, if administered efficiently can save hundreds of thousands, if not millions of dollars on typical construction projects.

CHAPTER TWO

Government Agency Profiles

Naval Facilities Engineering Command

Construction Management in the Navy is accomplished through a corporation-like organization. The head quarters of the corporation is the Naval Facilities Engineering Command (NAVFACENGCOM) located at the Washington Navy Yard in Washington D.C.. Commanding this organization is the Chief of the Civil Engineer Corps, a Rear Admiral, currently Rear Admiral Lou Smith. He acts as the CEO of the corporation with responsibility to the fleet Commanders in Chief (CINCs) and ultimately the Chief of Naval Operations (CNO) and the Secretary of the Navy (SECNAV). His responsibilities are very broad and go beyond the focus of this research report. The area of responsibility I will focus on is the Acquisition, to include Design and Construction of real property for the Navy, Marine Corps, and Air Force. NAVFACENGCOM is also responsible for the maintenance and ultimately demolition of these properties, which completes the life cycle of an acquisition.

Naval Facilities Engineering Command is organized as shown in figure (1), with Engineering Field Divisions (EFD) and Engineering Field Activities (EFA) located throughout the United States and the world. Each EFD and EFA has an element that is in charge of real property acquisition. These departments include Contract Support, Engineering Support and Construction Management Support.

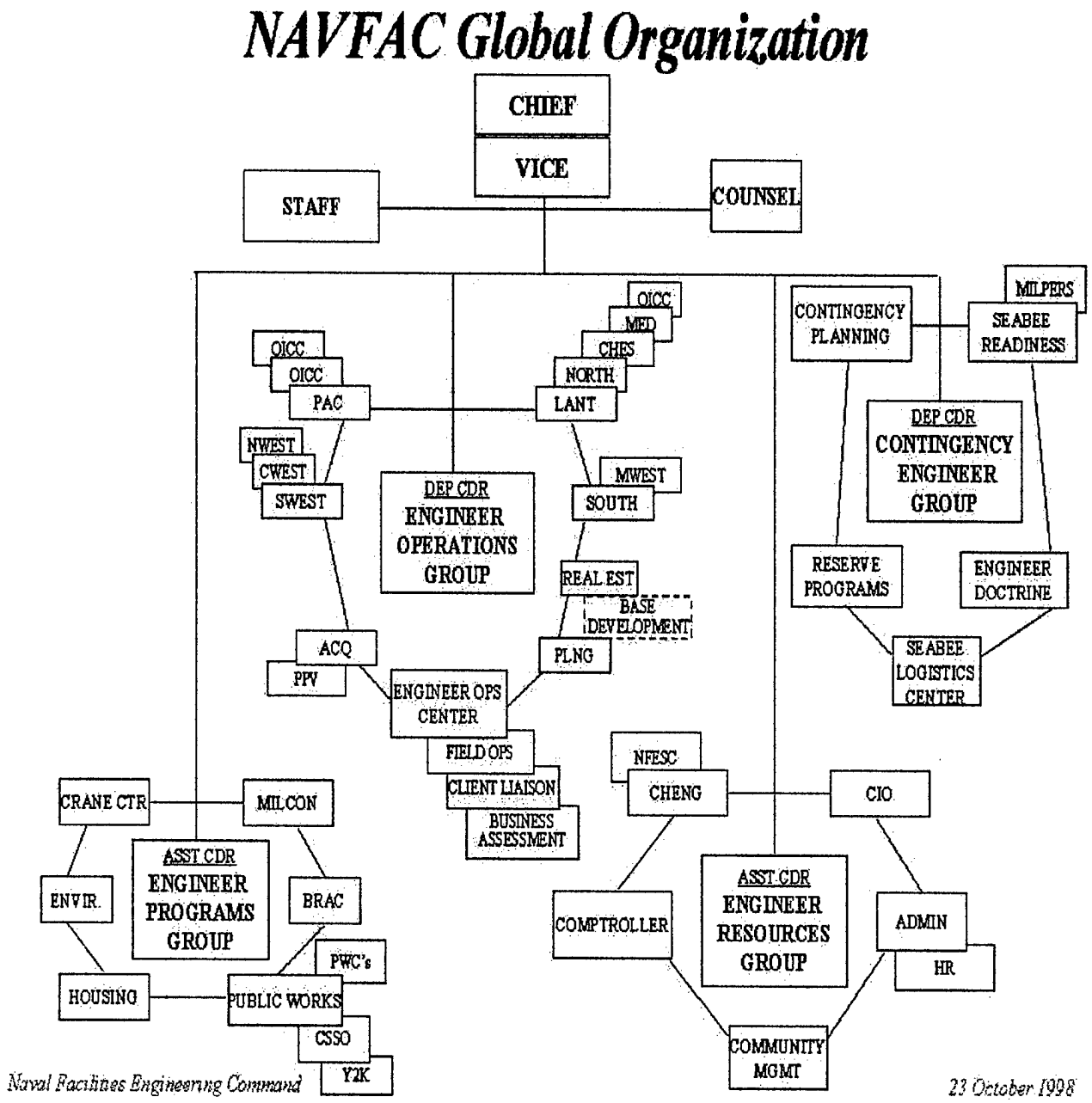

Figure 1

I will focus on Naval Facilities Engineering Command's Southern Engineering Field Division (SOUTHDIV) and the Atlantic Field Division (LANTDIV) located in Charleston South Carolina and Norfolk Virginia respectively.

SOUTHDIV's LANTDIV's areas of responsibility (AOR) are shown in figure (2). The field divisions have field offices located throughout their areas of responsibility. These offices, once known as Resident Officer in Charge of Construction (ROICC), are undergoing reengineering processes which will enable the offices to be satellite acquisition offices which will offer, on a smaller scale, all of the services that headquarters currently offers to the Navy, Marine, and Air Force clients. SOUTHDIV and LANTDIV headquarters are the areas' "hub" of expertise. In theory, any and all acquisition challenges can be meet inside these buildings.

The field divisions have field offices located throughout their areas of responsibility. These offices, once known as Resident Officer in Charge of Construction (ROICC), are undergoing reengineering processes which will enable the offices to be satellite acquisition offices which will offer, on a smaller scale, all of the services that headquarters currently offers to the Navy, Marine, and Air Force clients. Field Division headquarters are the AOR's' "hub" of expertise. In theory, any and all acquisition challenges can be meet inside these buildings.

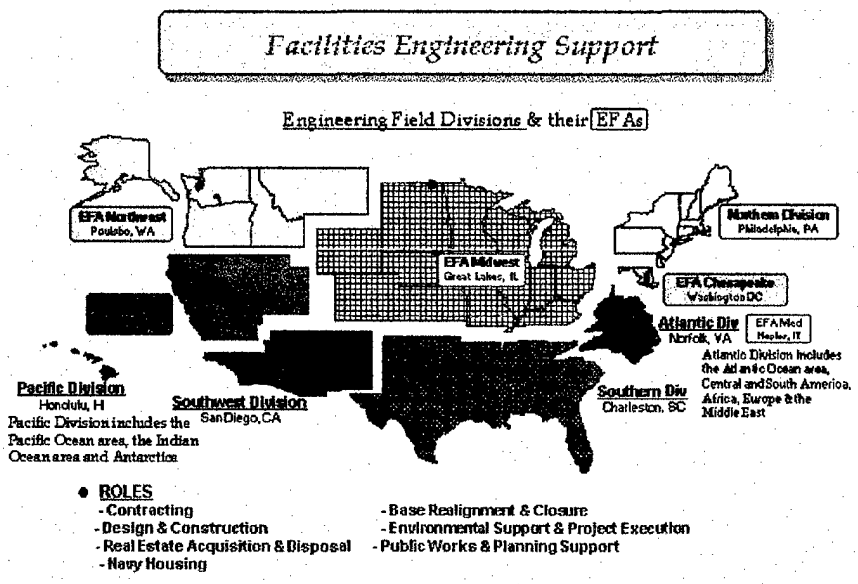

Figure 2

Atlantic Division, Naval Facilities Engineering Command

The Atlantic Division (LANTDIV) is one of four Engineering Field Divisions of the Naval Facilities Engineering Command which plan, design, and construct shore facilities for the U.S. Navy and Marine Corps on a geographic basis. The command's responsibilities are in three major areas--facilities planning, facilities acquisition, and facilities management.
LANTDIV's area of responsibility includes the mid-Atlantic and the Northeast regions of the United States; the Atlantic, Caribbean, Mediterranean and Persian Gulf areas; the United Kingdom, and Africa.

There are six components of the Atlantic Division. The Headquarters in Norfolk provides centralized financial services; as well as in-depth engineering, design and planning support for the other components.

1) The portion of the headquarters that serves customers in Virginia, West Virginia, North Carolina, the Atlantic, Caribbean, Central and South America is known as Mid-Atlantic.

2) Engineering Field Division, North located in Philadelphia, serves customers in the Northeastern United States.

3) Engineering Field Activity, Chesapeake located in Washington, DC, serves customers in Northern Virginia, Maryland, and the District of Columbia.

4) Engineering Field Activity, Mediterranean, located in Naples, Italy provides on-site expertise for the unique engineering, construction, public works management, and real estate requirements in Europe.

5) Officer in Charge of Construction Naples is managing the $600 million Naples Improvement Initiative in Italy.

6) Assigned Naval Reserve units make up the sixth component providing Contingency Engineering support to the entire command.

Major customers include the U.S. Atlantic Fleet, U.S. Naval Forces Europe, The United States Marine Corps, Commander Fleet Air Caribbean, Commander Fleet Air Mediterranean, U.S. Atlantic Command, U.S. Central Command, U.S. European Command, and U.S. Southern Command.

LANTDIV is the Department of Defense construction agent for the Mediterranean, Caribbean and portions of Africa. In this role LANTDIV manages projects for other U.S. military services and government agencies such as NASA, the DoD School System, and NATO.
Atlantic Division Civil Engineer Corps officers, Seabees and civilians provided engineering, construction and contracting support to U.S. Atlantic Command Joint Task Forces in Haiti and Guantanamo Bay, Cuba, to the U.S. European Command in Bosnia, and to the U.S. Central Command in Somalia.[3]

Southern Division, Naval Facilities Engineering Command

Southern Division (SOUTHDIV) is another of the four Engineering Field Divisions of the Naval Facilities Engineering Command which plan, design, and construct shore facilities for the U.S. Navy and Marine Corps on a geographic basis.

Located in Charleston, South Carolina, the command's responsibilities are in three major areas--facilities planning, facilities acquisition, and facilities management. SOUTHDIV's area of responsibility includes 26 states from South Carolina, west to Wyoming, north to North Dakota and south to Florida. Last year Southern Division contracted for over one billion dollars of construction, engineering and planning, environmental remediation, facility service, family housing, and utilities upgrades and maintenance.

U.S. Army Corps of Engineers

The United States Army Corps of Engineers (USACE) is made up of approximately 34,600 civilian and 650 military men and women.

Their military and civilian engineers, scientists and other specialists work hand in hand as leaders in engineering and environmental matters. The USACE workforce consists of biologists, engineers, geologists, hydrologists, natural resource managers and other professionals.

The USACE's mission is to provide quality, responsive engineering services to the nation including:

- Planning, designing, building and operating water resources and other civil works projects (Navigation, Flood Control, Environmental Protection, Disaster Response, etc.)
- Designing and managing the construction of military facilities for the Army and Air Force. (Military Construction)
- Providing design and construction management support for other Defense and federal agencies.

The Chief of Engineers has separate and distinct command and staff responsibilities. As a staff officer at the Pentagon, the Chief advises the Army on engineering matters and serves as the Army's topographer and the proponent for real estate and other related engineering programs.

As commander of the US Army Corps of Engineers, the Chief of Engineers leads a major Army command that is the world's largest public engineering, design and construction management agency. His office defines policy and guidance and plans direction for the organizations within the Corps.

The US Army Corps of Engineers Headquarters is made up of made up of an Executive Office and 17 Staff Principals. The Headquarters, located in Washington, DC, creates policy and plans future direction of all the other Corps organizations.

The Corps is organized geographically into 8 divisions in the US and 41 subordinate districts throughout the US, Asia and Europe. The districts oversee project offices throughout the world. Divisions and districts are defined by watershed boundaries, not by states.

Jacksonville District, U.S. Army Corps of Engineers

The Jacksonville District, U.S. Army Corps of Engineers is part of a federal agency that specializes in the planning, engineering, construction and management of projects in Florida and the Antilles. The Jacksonville District is one of five districts in the South Atlantic Division, which is headquartered in Atlanta. There are currently 40 Corps Districts and 8 Corps Divisions located worldwide. Many agencies, including the military, have turned to the Jacksonville District for planning, engineering and management assistance.

Examples of this assistance include coral reef restoration for the National Oceanic and Atmospheric Administration (NOOA), design and construction of sewage treatment facilities for the Environmental Protection Agency, dredging support to the Navy and Coast Guard and restoration of El Morro in the Caribbean for the National Park Service.[4]

Private Company Profiles

Holder Construction Company

Holder Construction Company was founded in 1960. Their product lines include; General Contractor, Design-Build, Construction Management (AT Risk) and Interior Construction. Holder continuously ranks as one of the largest general contractors, construction managers and design-builders in the United States by ***Engineering News Record.*** Headquartered in Atlanta, Georgia, they have completed projects throughout the United States.

Holder has worked in both the public and private sector and has experience with corporate headquarters, educational, data and technology centers, office buildings, aviation, interiors and warehouse-distribution-light industrial facilities.

Some of Holder's clients include:

- America Online
- America West
- AT&T
- Automatic Data Processing
- Coca-Cola
- Delta Air Lines
- Emory University
- Federal Express
- Federal Reserve Bank
- MCI
- McKessonHBOC
- Raymond James Financial
- State Farm Insurance
- Turner Broadcasting System
- United Parcel Service
- Wachovia

Holder emphasizes value, not cost, driven projects and pride themselves as leaders in the "Team Approach" construction contracting.[5]

PPI Construction Management

PPI founding partners, Charles R. Perry Construction and M.M. Parrish Construction, have been in the construction and general contracting industry in Florida since the 1960's. In 1990, they began providing professional Construction Management services as Perry-Parrish, A Joint Venture. This relationship culminated in the official incorporation of PPI Construction Management in June of 1993.

Together, the entire Perry-Parrish Group has more than 60 years combined experience in the construction industry. PPI Construction Management provides an array of services to educational, healthcare, institutional, criminal justice and governmental markets throughout Florida and the Southeast. During the past 5 years, the Perry-Parrish Group has completed over 150 projects throughout Central and North Central Florida.[6]

Metric Constructors Inc

Metric Constructors, a subsidiary of J. A. Jones Inc, with offices in Tampa and Orlando Florida, has over 110 years of construction experience. Metric advertises as being technical experts, flexible, and able to deliver projects under the most difficult conditions. Their corporate driven focus areas are K-12 schools, criminal justice, and sports. Services provided directly out of the Florida offices include estimating, scheduling, constructability reviews, life cycle analysis, value engineering, General Contracting, Construction Management, and Design-Build.

As a subsidiary of J.A. Jones, Inc., founded in 1890, Metric can draw on the resources of its parent firm and its thirteen operating subsidiaries representing more than 400 years of construction experience. Through this affiliation, Metric offers its clients an array of services and equipment resources including: Lockwood Greene Engineers-design, site procurement, Program Management, Jones Ventures & Regent Partners-financing Jones Management Services-plant operations. The organization maintains a permanent staff of over 150 administrative, technical, engineering, professional and managerial employees.[7]

CHAPTER THREE

Current Use Of Value Engineering

Value engineering is used extensively throughout the construction industry. The savings that have been attributed to VE is astronomical. I have found, from my research, that the Government has a more regulated and systematic approach to Value Management. All of the private companies I have used in my study offer value engineering as a part of their pre-construction services package but none have formal programs. This is not uncommon and not to say that their value engineering services are any better or worse than Government programs. Holder Construction Company, for instance, says that as a part of their pre-construction service they will apply value engineering techniques to bring a project back into budget, and by doing this can often save the owner money in some areas that can be applied in other areas like upgraded finishes.

Public Contracts

All federal acquisitions are governed by the Federal Acquisition Regulations (FAR). These regulations require that all federal acquisitions offices have a value engineering program. Value engineering clauses are mandatory for all construction projects of $100,000 or more. According to SAVE international U.S. government agencies are realizing an average of more than **$20 for every dollar invested**. The FAR outlines two basic VE approaches. The first is an incentive approach in which contractor participation is voluntary and the contractor uses its own resources to develop and submit any value engineering change proposals (VECP's). The contract provides for sharing of savings and for payment of the contractor's allowable development and implementation costs only if a VECP is accepted.

This voluntary approach should not in itself increase costs to the Government.[8] The second approach is a mandatory program in which the Government requires and pays for a specific value engineering program effort. The contractor must perform value engineering of the scope and level of effort required by the Government's program plan and included as a separately priced item of work in the contract Schedule. No value engineering sharing is permitted in architect engineer contracts. All other contracts with a program clause share in savings on accepted VECP's, but at a lower percentage rate than under the voluntary approach. The objective of this value engineering program requirement is to ensure that the contractor's value engineering effort is applied to areas of the contract that offer opportunities for considerable savings consistent with the functional requirements of the end item of the contract.

Value Engineering Contractor Proposals (VECP)

VECP, mandated to be a part of all construction contracts estimated at $100,000.00 or more, is the government's way capitalizing on the experience of construction contractors. Government Design efforts, in the past, have been very restrictive, with many design criteria and guide specifications to guide the effort. This has proven to not always be in the best interest of the project. Prior to VECP the contractors may disagree with the methods and materials specified in a contract, however there was no incentive for them to bring these concerns to the attention of the Government, hence you had much more projects built, by the plans and specifications, that was not the best value to the Government. When the FAR made VECP clauses a requirement in Government contracts, this gave the contractors the incentive they needed to be pro-active and recommend better ways of constructing these projects. There have been many valuable VECPs in Government construction contracts, however, there have been, and continue to be, contractors that abuse the system by identifying a defect in a specification during bid preparation and wait until after award to identify this defect to the Government. They identify it in the form of a VECP. This is unethical and illegal

but it happens and is very difficult, if not impossible, to control. This practice has given many Contracting Officers and Project Managers a negative attitude toward VECPs.

Value Engineering Studies

The second VE approach is one that the private sector is more familiar with, that is a Value Engineering Study during design. Typically, in public contracts, this is a separate A&E or consultant contract that takes a set of 35% design drawings and specifications through a comprehensive VE job plan. The Government "trigger" as to when a full-blown VE Study is required is a moving target. The FAR is intended to be a guide with enough latitude for each service community to mold to fit their needs. There are many differences among services and even within the same service on how the VE program is accomplished. The Air Force requires this study for all projects over $10 million. These studies typically cost about $30,000. For smaller scope jobs, there can be Value efforts less than that required in a full study.

Southern Division, Naval Facilities Engineering Command

Southern Division's (SOUTHDIV) Value Engineering is a service provided by their Cost Engineering Division. SOUTHDIV has a full time Value Engineering Manager whose primary responsibility is to execute the value engineering program. This is done using several tools including written instructions and guidelines, in-house value engineering reviews and the use of an indefinite quantity contract with an A&E firm that specializes in Value Engineering. The contract has line item, pre-negotiated services. These include full studies and consultations. Below is a description of the service provided:

V.E Studies: Perform a value engineering team study (VETS) for various types of construction projects. A multi-disciplined team of professionals trained in VE methodology will perform the study. The team leader shall be a Certified Value Specialist and all team members shall be registered professional engineers or architects with previous value engineering training.

The Government will specify the disciplines needed for each project. The study shall follow the five phase job plan as recognized by the Society of American Value Engineers.

Type 6-5 VE Study: 6 person, 5 day (40 hour) VE study

Type 6-4 VE Study: 6 person, 4 day (40 hour) VE study

Type 5-5 VE Study: 5 person, 5 day (40 hour) VE study

Type 5-4 VE study: 5 person, 4 day (32 hour) VE study

Type 5-3 VE study: 5 person, 3 day (24 hour) VE study

Type 4-3 VE study: 4 person, 3 day (24 hour) VE study[9]

When a full study is not required, SOUTDIV has the flexibility to bring in a value consultant on an as needed basis. Under this portion of the contract the consultant performs the following tasks:

VE Consultation: Provide value engineering consultation services by a Certified Value Specialist or experienced Associate Value Specialist through active participation during on-site project analysis or schematic design conferences. These conferences will be held at the project location and will include participants from the activity, design A/E firm, and SOUTHDIV. The purpose of the VE consultation is to provide early value engineering input during the development phase of a project, by recommending future building systems, layout and materials for consideration by the designer; evaluating proposed project siting, utilities, and overall project scope for adequacy to meet customer functional needs.[9]

Type 1-1 VE Consultation: 1 person, 1 day on-site

Type 1-2 VE Consultation: 1 person, 2 days on-site

Type 1-3 VE Consultation: 1 person, 3 days on site

Type 1-4 VE Consultation: 1 person, 4 days on-site

Type 1-3 VE Consultation: 1 person, 5 days on-site

The following requirements apply to each type of VE consultation:

* Prior to the VE consultation, query the VEDIS database for a list of VE proposals that have been accepted on previous similar projects. Provide the list to the designer at the on-site meeting and highlight those proposals that have a high degree of applicability to the current project.

* Provide value engineering input during the on-site conference through active team participation.

Within 7 days after the on-site conference, provide a memo to SOUTHDIV Code 077, with a copy to the design firm, outlining the value engineering input and suggestions provided during the conference. Attach a copy of the VEDIS query to the memo.[9]

Aside from the formal value engineering efforts, SOUTHDIV requires all A&E contracts to query the Value Engineering Database Information System (VEDIS) Program for previously identified VE proposals from similar projects. VEDIS is a database that was implemented by the Army Corps of Engineers as a research tool to determine at what dollar threshold a Value Engineering Study becomes economically efficient. It contains hundreds of completed studies and thousands of VE proposals.

Although not the primary purpose of the database, it has become a clearinghouse of VE proposals that can be recycled into similar projects.

NAVFAC and the Army Corps of Engineers constantly update the database. It is accessible through The National Institute of Building Construction's Construction Criteria Base (CCB) which is updated quarterly. It is available on Compact Disks and on line. This tool alone, if used to its full potential, could save thousands of dollars on design and construction costs for the "smaller" scope projects.

Atlantic Division, Naval Facilities Engineering Command

Atlantic Division (LANTDIV) Value Engineering Section is a part of the Engineering/Design Branch of the organization. They, like SOUTHDIV, have a full time Value Engineer on staff. The published purpose of their VE efforts is to "maximize value by improving function and quality while minimizing total life cycle cost." The trigger to provide value engineering efforts on LANTDIV projects is $1 million. LANTDIV provides VE studies and Function Analysis Concept Development (FACD) workshops. The VE studies are conducted by teams independent of the project design, usually through a LANTDIV indefinite quantity contract.

These studies are one week in duration and most include resolutions of VE proposals in the same week as the study is conducted.

Functional Analysis Concept Development (FACD)

The Pacific Division of NAVFAC first introduced Functional Analysis Concept Development (FACD) workshops into Navy contracting about ten years ago. It was later revised and revitalized by LANTDIV and they continue to use it with great success. FACDs use value engineering techniques during design charettes to help develop conceptual designs that respond to project scope, budget, and technical issues.

These charettes allow Users or Owners to work closely with designers to improve understanding by all of project functional requirements and the related design and project issues. When FACDs are conducted, other value engineering efforts at later stages of design are not usually required.

As a rule, LANTDIV will use FACDs on highly complex projects or projects with estimates exceeding $5 million, however, with their growing popularity with both designers and owners, FACDs can be used on smaller scope projects.[10]

FACDs include on-site development of a conceptual design in response to functional, aesthetic, environmental, base planning, site, budgetary, constructability, and other requirements with consideration of life cycle consequences of alternative design solutions.

The general purposes of the Function Analysis Concept Development workshop is to:

- Confirm project scope and budget
- Expedite the design
- Improve the quality of the design
- Improve understanding by all involved parties of project issues
- Achieve "best value" design
- Minimize redesign and associated expense
- Partner "buy-in" of design solutions[10]

As with value engineering studies, there a tremendous amount of work is involved in a FACD. The participants of the workshop work longer than usual hours and often work through the weekend to complete the effort in ten days. It is a tribute to the effectiveness of the FACD that, with all the hard work involved, LANTDIV is now getting repeat customers that are requesting these workshops.

To have a successful workshop, there is preliminary work that has to be conducted. These tasks include: a kick-off meeting in which all the players are introduced, the project scope is conceptually defined, and definitive dates for the FACD are identified; Site condition surveys must be conducted prior to the workshops to have an understanding of possible conflicts etc; a draft conceptual design and cost estimate must be developed prior to workshop. This draft design and estimate is the starting point for the workshop, with an understanding by all that both may change considerable before the final report is written.

FACD workshops should always be located at or near the project location. The design team must have adequate staffing in all disciplines to enable them to meet short turn-around times for alternative design solutions. The FACD facilitator may be provided by the Government or the Designer of Record. The facilitator leads group discussions, helps promote creativity, keeps the workshop on track, and assembles the final FACD report. Facilitator requires are:

Value Engineering-trained (SAVE 40-hour workshop, minimum), Certified Value Specialist, CVS, preferred, professionally registered.

Experienced in FACD-type efforts.

Independent of the design team.

The FACD process is much like a VE study in that there is discussions of functional requirements, followed by preliminary concepts, brainstorming sessions, revised concepts, etc. This process helps to refine the project scope around User functional requirements and other parameters of the project.

Cost estimates to support FACD efforts may be generated using parametrics or by any relevant method in which the design team has confidence. The project that is presented in the final report must be of a scope that the Designer has a great deal of confidence can be built within available funds.[10]

The FACD report presents the final, confirmed project scope and preliminary design, which will become the basis for future submittals. The report is developed completely on-site, distributed and endorsed by all parties before the conclusion of the workshop. It is important that the report completely cover the conceptual design, the alternatives considered, and unique requirements of the project, outstanding issues and plans for their resolution. The report must be in sufficient detail as to allow the designer to proceed to the next phase of design quickly and present no "surprises" at the next design submission. LANTDIV has used FACD workshops very effectively, winning two design awards in the last two years. This workshop can be applied to all acquisition strategies including design-build.

Jacksonville District, U.S. Army Corps of Engineers

The Army Corps of Engineers (ACOE), like all government contracting agencies, are bound by law to include value engineering into their contracts. The same $100,000 threshold for VECP clauses applies to the ACOE. They also have an established Value Engineering program with instructions, guidelines, qualification requirements, and limits for which different Value efforts will be expended.

The ACOE has a Value engineer at their headquarters level that is responsible for monitoring and controlling the entire ACOE's Value program.

District Value engineers who are responsible for executing the value program in their districts assist him. The Corps also has and established Value engineering study team, located at headquarters, which will conduct Value Engineering Studies, for a fee, for anyone in the Government that wants to hire them. This team is called Office of The Chief of Engineers Value Engineering Study Team or OVEST.

As mention before in this report, the threshold at which a VE study is required is different between the different agencies. Based on guidance from Headquarters, USACOE will apply VE to each project estimated to exceed $1 million. The instruction is vague as to what type of VE efforts are to be applied and this is likely intentional, giving the district Value Engineers the latitude to determine the proper value engineering technique to choose.

One VE effort that the Army seems to use more than the Navy is the in-house VE Study team. These teams are usually lead, or facilitated, by the district Value Engineer. They are made of all the necessary Engineering disciplines needed for the study. Once assigned to a VE study team, you are relieved of all other duties until the conclusion of the study.
The Army also uses an indefinite quantity A&E contract to provide Value engineering studies, much like the Navy.

OVEST

OVEST was established in 1984 to support the Corps' overall value engineering program and to assist field-operating agencies in the area of value engineering. In the first ten years of establishment, the OVEST teams completed over 300 studies and saved an estimated $1.09 billion dollars with a savings to cost of study ratio of about 35 to 1.[11]

They have conducted studies in several countries and throughout the United States. The OVEST teams consist of a Supervisory General Engineer, trained and experienced in Value Engineering, an Administrative Secretary, Civil Engineer, Construction Engineer, Structural Engineer, Mechanical Engineer, Electrical Engineer, and Architect. The OVEST team has access to all levels of the Corps' management and is in the unique position of being able to influence criteria changes (higher order functions) when necessary.

Private Contractors

As stated earlier, the private Construction Management companies that I have researched all offer Value engineering, as a part of their pre-award services, however, do not have rigid guidelines on how these efforts are to be conducted. This is not surprising nor an indication that they do not have quality value engineering programs. It simply shows that any bureaucratic organization such as the Government will generally have more written rules and regulations than their non- bureaucratic counterparts. All three companies that I have interviewed are very similar in their approach to value engineering. They also have a common belief that most times value engineering efforts are used primarily to stay within budget or get back into budget and not necessarily as an idealist exercise to ensure there customers are getting the absolute best value for their program dollars. There are, of course, exceptions in which case, there have been true value alternatives that have given the owner long lasting value and lower construction and life cycle cost. They all believe that getting the "team" together as early as possible does in itself increase the likelihood of adding value to the end product. "Teaming" and "Team Approach" are the buzzwords in the CM industry, and for good reasons. Each company has a long list of successful projects and value engineering proposal that have been made possible due to "Teaming".

Holder Construction Company

Holder Construction Company prides itself on a repeat business rate of 80%. They believe that fostering a "Team Environment" is the key to their success. As with the other firms, Holder does not have a formal value engineering program, however, they do provide this service as a part of their pre-award service package. They track value and quality from the time they come on board with a project through the use of a database and spread sheet program. By identifying and tracking costs, quality and value, from the beginning, many times Holder is able to complete a project with a surplus in construction contingency. This contingency is applied to previously identified "extras" or finish upgrades that the owner may want but not a primary function of the project. This "value", more esteem value than functional value and, according to Holder, is possible due to their total commitment to quality and value. This type of owner benefit is not directly attributable to a VE study, but adds value to the project non-the-less.

Holder's Value Engineering studies follow the guidelines developed by SAVE. Their VE studies are, for the most part, executed with in-house teams. They are developing a lessons learned database similar to VEDIS, which is used by the Government.

PPI Construction Management

PPI provides complete preconstruction services which includes: attendance at all design and review meetings, constructability reviews, prequalifications of subcontractors, scheduling, value engineering, cost reduction strategies, cost estimates (at concept design, schematic design, design development), and a GMP usually at 50% construction documents.

The fee for this service generally runs about 1% of the cost of construction and is not included in the GMP. This percentage compensation does not always work well. There is not a tremendous amount of difference in the work effort required for preconstruction for a $3,000,000 job vs. a $30,000,000 job. The same analysis, estimates, and study are pretty close to the same, in fact according to Mr. David Wood, "It is often more difficult to bring in the smaller project. We are finding that the break even fee for a full scope of services falls between $70,000 to $80,000." This varies widely depending on the scope of the project. As an example, a wet chemistry lab requires a lot more work than a general classroom building, specifically with regard to VE.

Mr. Wood, like many others in the profession, believes the term value engineering has become widely misused. "VE has become a catch phrase for anything that reduces the cost of a project, which often includes cutting scope and reducing quality." Says Mr. Wood. "Scope reduction and quality reduction are viable alternatives to bring a project in within a predetermined budget, but they are not VE." In a Value Engineering Analysis, PPI looks at the some of the following:

1. Structural Analysis

Is the right system being used? Are the loads, spans and configuration set for maximum value? Is the material readily available? (Structural Steel may be more cost effective than Cast in Place Concrete but if mill steel is 28 weeks out for delivery, the ultimate "value" may be CIP) Are the trade contractors available and are they hungry?

2. Material Analysis

What are the exterior skin options, both from the standpoint of actual material and the geometries and volume of the structure? (Will a different building configuration enclose the same amount of program with less exterior skin) What is the availability of materials and what is the lead-time? Can alternative backup systems be used that will not alter the exterior appearance of the facility?

3. Systems Analysis

This is predominantly Mechanical, Electrical, Plumbing (MEP) work. PPI uses an in-house MEP coordinator who reviews all MEP systems from the standpoint of both equipment and installation. Cost models can be produced showing the cost effectiveness of various systems as a function of both first cost and life cycle cost.

4. Schedule Analysis

PPI involves their actual project managers early on in constructability and schedule review. Any opportunity either for early ordering of long lead items or phasing and sequencing that will accelerate the schedule translates into direct savings and true "value engineering".

5. Marketplace Analysis

This is the least scientific and often some of the most important VE input that a CM can provide.

It involves a connection with the trade contractor community to understand workload, availability of labor force, what else is being built in the same time frame. It also involves knowing where to go to get the right subs in a compacted marketplace.

This pulse of the trade contractor community is often a key to providing input to the design team to get a set of documents that will bring the best price from the street.

What is described above is how PPI approaches what they call true Value Engineering. It revolves around cost reduction approaches that will be, essentially, transparent to the owner. There is another approach entirely which They call Cost Reduction Strategies that impacts scope and quality and, in Mr. Wood's, opinion the fact is that on almost every job it takes a combination of both approaches to deliver the project.[12]

Metric Constructors Inc

Metric Contractors include value in their delivery systems much the same as Holder Construction Company; A "Team Approach" being involve early and often in the design process.

When Metric is contracted to do preconstruction services, they start at the schematic Design Phase with a look at site selection, parking solutions, building configuration to include number of floors and building footprint. Metric presents their recommendations to the owner and if accepted, these recommendations are included in the Schematic design. Once the schematic basics are studied, the team looks at other systems to include: foundation type, structural frame selection, exterior closer selection, and a first look at the outline specifications. These proposals are presented to the owner and if accepted included into the schematic design. As the design develops, the Metric team looks more closely at interior and exterior systems such as; mechanical system selection, glazing systems, roofing systems, and the draft specifications review. As the design becomes more and more complete the team develops cost comparisons of finish types, Document coordination review (similar to redicheck), and the final specification review.

From Metric's point-of-view value must be built into the project from conception.

Mr. Rick Furr, of Metric's preconstruction services division states, "I follow the time line of the design team and evaluate the major components in correlation to those decision points. This prevents the problem of the designers getting too far ahead and having to rework their plans."

The recurring theme in the private sector is to work hand in hand with the designer, owner, and constructor, to produce the most efficient project, because unlike Government construction management, in the private sector, every dollar saved not only helps your bottom line but it also helps you to get return business.

CHAPTER FOUR

Success Stories

There is no shortage of VE related success stories, both in Government contracting and the private sector. As stated previously, in the OVEST program alone, there has been over $1 billion dollars in savings contributed to VE studies. This represents only a very small percent of all savings in the Government sector alone. It should come as no surprise that using VE methodology would lead to better, more profitable, more value-added construction projects. The VE methodology, in some form, can and should be applied to everyday decisions made by everyone, especially the people entrusted to spend the general public's hard earned money.

Government Agencies

As mentioned before, LANTDIV, through the use of The FACD workshops have won two design awards in the past two years. This is the narrative for one of those awards.

P141U Aircraft Maintenance Hangar at Naval Air Station Oceana, Virginia Beach, Virginia.

- From 21 June 1999 to 2 July 1999, representatives of several design firms and U.S. Navy organizations worked together, using Value Engineering principles and techniques as an integral part of the design process, in a Function Analysis Concept Development (FACD) workshop on project P141U Aircraft Maintenance Hangar at Naval Air Station Oceana, Virginia Beach, Virginia. Budget, scope, criteria, environmental and functional issues challenged this $22M project.
- Criteria which has served the Navy well for over 20 years dictates hangar designs which minimize individual project frontage onto valuable flightline area in order to accommodate future development.

The criteria also are intended to provide for flexibility, requiring a "cantilevered" design, which maximizes unobstructed hangar area and therefore can be used by many different types of aircraft.

- In this case, severe stormwater drainage issues limited further development of the flightline area. There is also a severe shortfall in available water supply for fire fighting which limited the size of open areas between firewalls. A design was therefore sought which would respond better to this project's intended functional requirements while addressing the many project issues.

- In ten intense days of effort, often working well into the night, four iterations of the design were developed, critiqued and refined until the final concept met the needs of all involved. The final concept responded most effectively to User functional requirements by maximizing aircraft parking inside the hangar, co-locating related functions, putting aviators nearer the flightline with access unimpeded by maintenance functions, providing necessary storage areas and including the latest state-of-the art fire fighting system. The final design also reduced cost, compared to a similar sized facility constructed in accordance with the criteria.

- The final design varied significantly from NAVAIR and NAVFAC hangar design criteria standards. Out of repeated, intense discussions came general agreement that, at least in this case, the final concept worked better than the standard design for this Station, for these Users, for this application and was therefore accepted.

Savings/Cost Avoidances

- The cooperative efforts of the named commands and consultant firms resulted in a new hangar design reflecting savings of $1.6M compared to a comparably sized hangar designed in accordance with design criteria.

- Value Engineering savings were developed by the Designer of Record, hence is considered credible. These savings are documented in the Construction Criteria Base Value Engineering Database Information System.

- Savings in operational costs due to aviators being closer to their work, not having to transit a hazardous maintenance area to and from the flightline, and co-location of related functions are not calculable but thought to be considerable.

Product/Process/Service Improvement

- There was no reluctance on the part of the team to present challenges to the criteria in the interest of functional requirements and resolving issues specific to this project. Significant waivers of NAVAIR & NAVFAC design criteria were requested and granted in an expedited manner.

- The final concept responds most effectively to User functional requirements by maximizing aircraft parking inside the hangar, co-locating related maintenance functions, putting aviators nearer the flightline with access unimpeded by maintenance functions, and including the latest state-of-the art fire fighting system.

- As a result of the actions of this team, the governing criteria for U.S. Navy aircraft hangars will be reviewed and revised.

Unique/Unusual Approach

- This effort demonstrated unique cooperation among Navy Commands and design contractors during the design process, with the unselfish motive of providing the best design possible that responds effectively to User functional requirements.

- There was no independent Value Engineering team. At this early, conceptual design stage, the resourcefulness and creativity of the Designers of Record was encouraged and challenged. In addition, Navy representatives contributed greatly to the creativity demonstrated in this project.

- As demonstrated by this project, efficiency and acceptability of Value Engineering efforts is improved when they are made integral with the design effort.

- This process demonstrates the constructive application of Value Engineering as an integral part of the design process, an improvement over typical Value Engineering studies which challenge designs after the 35% level and often result in lost design effort and delays in design and construction.

- Value Engineering efforts of this type have been so overwhelming endorsed by Users and Designers alike, they are becoming standard at the Atlantic Division, NAVFAC.

Other Recent Navy success stories follow. More information on these and other VE proposals is included in Appendix A:

250 units of family housing at NSB Kings Bay Georgia

4 Accepted VE proposals for a cost avoidance/savings of $384,000

Propulsion Training Facility at NWS Charleston, South Carolina

2 Accepted VE proposals for a cost avoidance/savings of $806,000

Reserve Center, Houston Texas

2 Accepted VE proposals for a cost avoidance/savings of $156,000

Hospital Addition/Alteration and Life Safety Upgrades at Naval Hospital Pensacola Florida

7 Accepted VE proposals for a cost avoidance/savings of $456,303

The following summaries are evidence that the Army Corps of Engineers' value engineering team, OVEST have had many successful studies in the last few years.

Project Summary at a Glance--June '96-July '97

Total VE Costs	**$2,446,280**
Total Projects CWE	**$1,294,806,000**
Total Savings	**$245,374,000**
Total Studies	**57**

Average OVEST Study Cost		**$21,459**
% Total Savings	$ 245,374,000 / $1,294,806,000	**= 19%**
Return on Investment (R.O.I)	$ 245,374,000 / $ 2,446,280	**= 100:1**

All Savings are "apparent savings" upon completion of study.
Final savings will be determined when designs are complete.

Project Summary--June '96-July '97

Military Projects/Location	Date	Div/Dist/ Agency	Savings ($1,000)
1. Ambulatory Health Care Center, Maxwell AFB, Montgomery, AL	Jul 96	CESAM	1,900
2. ATCOM Admin Building Renovations, Ft. Monmouth, NJ	Aug 96	CENAN	132
3. Retrofit Lighting Fixtures, Picatinny Arsenal, NJ	Aug 96	CENAN	1,042
4. Range 37, Anti-Armor and Live Fire Tank Range, Ft. Drum, NY	Aug 96	CENAN	290
5. Runway Expansion, Ft. Drum, NY	Sep 96	CENAN	1,500
6. Range 24, Infantry Platoon Battle Course, Ft. Drum, NY	Sep 96	CENAN	-----
7. Whole Barracks Renewal, Schofield Barracks, HI	Sep 96	CEPOD	600
8. Revitalize 56 Company Grade and NCO Family Housing Quarters, West Point, NY	Oct 96	CENAN	1,201
9. Ambulatory Health Care Center, McGuire AFB, NJ	Nov 96	CENAN	1,944
10. Mahan Hall, USMA, West Point, NY	Feb 97	CENAN	1,000
11. Rehabilitation of Cullum Road Bridge, USMA, West Point, NY	Feb 97	CENAN	2,000
12. Phase III, Electrical Upgrade, Picatinny Arsenal, NJ	Apr 97	CENAN	204
13. Close Combat Training Facility, Ft. Carson, CO	May 97	CEMRO	632
14. Rapid Deployment Facility, Ft. Drum, NY	May 97	CENAN	682
15. Temporary Lodging Facility (6 Locations), U.S. Air Force	Jun 97	CENAN	1,300

15. Temporary Lodging Facility (6 Locations), U.S. Air Force	Jun 97	CENAN	1,300
16. Benham Blair Standard Barrack Design, Ft. Worth District	Jun 97	CESWF	-----
17. Ft. Carson Barracks Rehabilitation, Colorado Springs, CO	Jul 97	CEMRO	140
18. Admin Support Unit, Manama, Bahrain			
--Quality of Life	Jul 97	TAC/Bahrain	80
--Transient Bachelor Quarters	Jul 97	TAC/Bahrain	2,300
--Site Utilities and Reverse Osmosis Facilities	Jul 97	TAC/Bahrain	300
Sub-Total			**17,247**

Civil Projects/Location	Date	Div/Dist/ Agency	Savings ($1,000)
1. Van Bibber at Arvada, CO	Jul 96	CEMRO	1,378
2. Bonneville Outfall, DSM, and Smolt Facility, Portland, OR	Sep 96	CENPP	1,471
3. Batchtown Habitat Rehab and Enhancement Project (HREP), Calhoun County, IL	Sep 96	CELMS	2,141
4. Poplar Island Restoration, MD	Oct 96	CENAB	3,000
5. Green Brook Flood Control Project, Middlesex, Somerset and Union Counties, NJ	Oct 96	CENAN	38,000
6. Black Rock Lock Guide Wall Rehabilitation, Buffalo, NY	Oct 96	CENCB	817
7. Central Indianapolis Waterfront (2 studies), IN	Nov 96	CEORL	13,800
8. Galveston Process Study, Galveston District	Nov 96	CESWG	-----
9. SELA Scoping Study, New Orleans District	Dec 96	CELMN	-----
10. Boston Harbor Improvement, MA	Jan 97	CENAN	27,363
11. Shelter Island, New York Erosion Control Project, NY	Jan 97	CENAN	476
12. Soniat Canal and Canal No. 3 (2 SELA Projects), Metairie, LA	Jan 97	CELMN	62,631
13. Terry Parkway Canal (SELA Project), Jefferson Parish, LA	Jan 97	CELMN	1,244
14. Bonneville Surface Collector, Portland, OR	Jan 97	CENPP	227
15. Saquoit Creek Flood Control Project, Whitesboro, NY	Feb 97	CENAN	2,386
16. Columbia River Treaty Fishing Access Sites, Columbia River, OR & WA	Feb 97	CENPP	266

17. Elmwood & Suburban Canals (2 SELA Projects), Metairie, LA	Mar 97	CELMN	11,376
18. Oakwood Beach Storm Drainage Reduction Project, Staten Island, NY	Apr 97	CENAN	198
19. Elizabeth River, Hillside, NJ	Apr 97	CENAN	106
20. Phase 3, Tropicana and Flamingo Washes, Las Vegas, NV	Apr 97	CESPL	11,223
21. Nashville, Napoleon, and General Taylor Canals (3 SELA Projects), New Orleans, LA	May 97	CELMN	4,750
22. Fire Island, Long Island, NY	May 97	CENAN	3,404
23. Shinnecock Renourishment, Long Island, NY	May 97	CENAN	2,323
24. Iao Stream, Maui, HI	May 97	CEPOD	2,242
25. Palau Road Study, Island of Palau	Jun 97	CEPOD	TBD
26. Wailupe Stream, Oahu, HI	Jun 97	CEPOD	7,500
27. Oleander/Dublin (2 SELA Projects), New Orleans, LA	Jun 97	CELMN	7,256
28. Brickwall Canal, Marrero, LA	Jun 97	CELMN	5,870
29. 2-Mile/Grand Cross Canal (4 SELA Projects), Marrero, LA	Jul 97	CELMN	14,471
Sub-Total			**225,919**

Work for Others Projects/Location	**Date**	**Div/Dist/ Agency**	**Savings ($1,000)**
1. Rehab and Modifications--HV Power System, NASA Lewis Research Center, OH	May 97	NASA	2,208
Sub-Total			**2,208**
TOTAL			**245,374**

Private Contractors

I have found that Government agencies are far better at publicizing their VE success stories than the private sector Construction Management organizations. I believe that this is due to the fact that VE has become a Federal mandated portion of all Federal acquisitions and therefore the Government is eager to show how well the program works, on the other hand, in the private sector, these professionals are more interested in showing overall accomplishments and positive projects and do not take the time to single out VE type successes. There are A&E firms that specialize in VE studies and of course they have many success stories to share. The private firms I have researched do most, if not all, of their VE work in-house. All of the preconstruction services managers I have interviewed have shared VE success stories with me but you will not find these accomplishments in any of their marketing brochures or web pages. The following are success stories from these private firms:

The Sarasota Judicial Center

The Sarasota Judicial Center is a 12 story county courthouse that **Metric** completed about 18 months ago. The Architect designed emergency egress stairs in the four corners of the tower that had surrounding walls of poured concrete to transfer the wind loads to foundations. These walls were clad on the exterior with architectural precast to match the rest of the building skin. **Metric** suggested using thicker precast panels that were connected to each other structurally, thus eliminating the poured concrete walls altogether. This saved the County $450,000 on this project.

The Charlotte County Justice Center

The Charlotte County Justice Center is a 185,000 square foot courthouse that **Metric** completed 12 months ago. During discussions with the local power company (Florida Power & Light) about source and location of incoming primary power, Florida Power asked if the County was interested in using ice storage for the air conditioning system. Florida Power offered lower "off peak rates" to get the County interested. **Metric** worked with Florida Power and the mechanical engineer for the project to develop the life cycle pay back for the investment in the ice storage system. The County was reluctant to approve the cost due to project budget constraints even though the pay back appeared to be 5 years. Florida power finally offered to pay half the cost of the ice storage system because of the advantage to them to keep this building off the daytime demand for their power grid.

The final design of the mechanical system allows the County to build ice when the building is unoccupied, and to generate air conditioning from the ice during the day.

America On Line, Dulles Technology Center, Dulles, VA

The original design (approximately 30 percent complete when **Holder** was awarded the job) called for a cast-in-place concrete structure with a masonry skin. "We looked at that and immediately felt as an advantage to the schedule a design alternative needed to be considered," Morgan said. **Holder** evaluated a pre-cast structure with a pre-cast wall skin and advised AOL that it would not only shave about 12 weeks off the schedule, but would also save nearly $1.5 million.

Roberto C. Goizueta Business School, Emory University

Holder began the extensive value-analysis process by developing a list of hundreds of items that, if implemented, had savings potential. The items were prioritized into A, B and C categories.

The A's would have little impact on the program and in fact, probably would be incorporated even if the budget was not an issue. The B's would be tougher to swallow. And the C's no one wanted to even think about.

In addition to savings from revisions, other savings were generated. **Holder** was able to move up the completion date two months to reduce costs. Since Emory would receive the building sooner than planned, they terminated a lease at an off-campus location and shifted classes into the new Goizueta Business School. To accelerate construction, **Holder** covered the building with fiberglass impregnated gypsum board sheathing and covered windows with plastic so work on the interior could begin sooner than normal.

Wachovia Center, Winston-Salem, N.C.

Among other things, **Holder Construction Company** and Cesar Pelli and Associates representatives worked with the stone subcontractor, Freda, Ltd., of Massa, Italy, to develop a technique that resulted in the off-site assembly of much of the lobby floor. The various pieces of the star design were cut to very high tolerances and then constructed and laminated to 5' x 5' slabs of stone before being shipped to the job site for final installation.

The result was at least twofold: 1.) The off-site construction of the most intricate parts of the design guaranteed better quality control than would have been possible if all the work had been done at the site, and 2.) The fact that it was done off-site saved costs and reduced the overall schedule for the high-end lobby finishes.

The unique dome top on the building was value engineered to ensure the best value dome was constructed. . The team chose to use a high-tech space frame structure for the building dome. It was designed and manufactured in Germany at half the price of conventional steel.

UF Health Professions, Nursing, Pharmacy Complex

The exterior skin of the building was predetermined to be predominantly a Gainesville Red Range brick. The trade contractor market for masonry is extremely compacted resulting in higher than expected unit costs. **PPI** was able to look at the structural frame and change from cast in place concrete with concrete block backup to a structural steel frame.

This resulted in savings not only realized through reducing the masonry scope of work by over one third, but also the increased speed of erection afforded by the steel frame resulted in further savings.

UF - IFAS/Aquatic Food Products Laboratory Preconstruction (PPI)

During the Preconstruction Phase of this highly visible project, the single story building had to be reduced in footprints due to the location on campus and the relocation of underground utilities. By reducing the footprint, the building became two stories. All cost advantages of the single story building were lost. The team members reviewed each individual item on the project from the exterior finish to the quality of casework for the laboratories. In addition, the team worked closely with physical plant facilities to allow some utilities to stay active in place and be built over while other provisions were made to allow future expansion of utilities around the building. The GMP was developed with NO contingency and the project was bid approximately 3% under the guaranteed maximum price.

JW Mitchell High School

During the development of the construction documents for the J.W. Mitchell High School the **PPI** team was able to identify savings in the external envelope and interior finishes from the initial design development.

As a result of the realized savings the owner was able to make the choice of upgrading from a roof mounted DX HVAC system to a more efficient chilled water system, which provided for lower maintenance costs as well as system wide life cycle cost savings.

CONCLUSIONS AND RECOMMENDATIONS

Conclusions

My research has shown that value engineering, both in Government contracting and in the private sector, has saved billions of dollars in the construction field alone. I have also found that value management, which includes value engineering, value analysis, value monitoring and value engineering contractor proposals (VECP), is a vital part of any construction program.

The Government contracting offices that I have researched execute their value programs much differently than their private sector counterparts. The Government has a more detailed process of value engineering and the private firms do a value engineering study as a part of budget control and as an added service to their customers. The Government often contracts value engineering studies out to A&E firms that specialize in value engineering. The three private CM companies I spoke with do all of their VE in-house.

There is consensus between Government and Civilian construction management companies that too often value engineering is used as a budget tool and not a creative thinking, best value, function oriented exercise that it is best suited for. As stated earlier, the budget reduction study is a very important tool in a construction mangers toolbox, but it is not in itself value engineering. A true value engineering study may not reduce initial cost at all; in fact some excellent value engineering recommendations have increased the initial cost. The keys to value engineering are keeping in mind all types of value; (cost, use, esteem, and exchange), function and life cycle cost. Can the alternative provide the function required or desired at a decreased life cycle cost to the customer?

If the answer to either of these questions is no, then the alternative provides no *added* value to the project. You may challenge this statement with an alternative that gives the owner a more desirable finish at no additional cost but no life cycle savings.

I would say that that this alternative likely adds life to the finish, which does increase life cycle cost. If the owner did not like the original finish, they would likely replace it prior to the end of its useful life.

Value engineering, in construction, is alive and well. As I have shown, it may not look exactly the same from project to project, it may be called value engineering, value management or value analysis, but the important fact is that on every project in which value is methodically analyzed, the owner and end user reaps benefits. These benefits may be in the form of reduced construction cost, reduced maintenance and repair costs, reduced construction duration, added upgrades, or a project that finished within budget and on time.

The construction industry is plagued with budget overruns and project delays. Value engineering is the tool that will most benefit the contractors, owners, and the industry as a whole to reduce the delayed, over budget projects. By "teaming" with the designers, owners, and end users the construction manager gives himself a much better chance to succeed.

Recommendations

In my opinion, the most exciting value engineering efforts that are being used today are associated with the Functional Analysis Concept Development (FACD). This adaptation of value engineering methodology, applied at the conceptual stage of a project, has boundless potential.

It can be applied to any acquisition strategy, including design-build, it has already begun to change the way the Navy designs facilities. As shown on the P141U Aircraft Maintenance Hangar at Naval Air Station Oceana, Virginia Beach, Virginia, a properly conducted FACD can actually change the template for other similar construction.

I do not believe that the FACD philosophy is limited to Government contracting. I could see private sector CM companies adding this service to their resume. Any time you gather the architects, engineers, owners; construction managers, and end users in an effort to "nail down" the scope of a project prior to the 35% design phase you have made a very good investment in your project. As we know, what the contractor sees when he looks at a set of plans is not what the designer had in mind and neither see what the owner anticipates, so to break that code would be remarkable and I believe the tool to do that with is a well coordinated FACD workshop prior to conceptual design.

The problems associated with FACD are minimal, but do exist. They required total dedication to the process. Ten days of working late and through weekends on an idea is sometimes hard to justify. Owners MUST send people to these workshops that have the authority to make top-level decisions. Construction managers MUST be willing to do hard-nosed constructibility reviews in very short periods of time. These reviews must include site visits and minimal utility exploration. The A&Es do most of the presentable work in these workshops so they MUST be equipped to do so. They MUST also be willing to design what the "team" decides is the best value project. The facilitator MUST be educated and experienced in value engineering and team management.

The facilitator must guide the team towards the goal; keep the team on track both in direction and time. And lastly the facilitator must be able to present the findings of the team to the owners in such a way as to receive "buy-in" for the product the workshop has produced.

I know we will continue to see more and more FACD workshops in the Navy and I would not be surprised to see this same sort of workshop being used in the private sector. It may not be called FACD but it will produce similar results and that is the most important aspect of value engineering in the construction industry.

Another area for improvement in value management is the continued development of VE proposal databases such as VEDIS. At present, VEDIS is not as useful to A&E firms as it could be. According to LANTDIV Value Engineer, Mr. Bill Bogue, "It is most useful only to those who know it...what is in it...where it came from...how the software can be manipulated, etc. 3 people could query the database for info on the same project and come up with 3 different answers, just because their queries were phrased differently." If the Government is going to require A&Es to use the database, which it does, it must make the database more user-friendly. Many great VE proposals are not getting looked at because they are too difficult to retrieve. This means we are still designing "problems" into our projects

Everyone in the construction management business needs to do a better job of communicating to the owners and end-users how effective a true VE study can be to their project. Too many times initial cost and higher order functions drive projects and in essence eliminate many useful value engineering proposals before they can even be fully investigated.

Value management methodology should be applied to every construction project, regardless of scope. The level of effort should be commensurate with the scope of the project and applied at the most opportune time in the project lifecycle to produce the best value for the owner, which is what all construction managers should be striving to do.

REFERENCES

[1] U.S. Department of Transportation, Federal Highway Administration, Value Engineering Textbook, January 1996

[2]American Association of Cost Engineers, Skills and Knowledge of Cost Engineering, Chapter 16 Basic Value Engineering, July 1988

[3] Atlantic Division Web Page at http://www.efdlant.navfac.navy.mil/home.htm

[4]Jacksonville District, U.S. Army Corps Of Engineers Web Page at http://www.saj.usace.army.mil/neworg.htm

[5] Holder Construction Company Web Page at http//www.holder.com

[6] PPI Construction Management Web Page at http//www.perry-parrish.com

[7] Metric Constructors Web Page at http//. www.metricconstructors.com

[8] Federal Acquisition Regulations, Part 52.248

[9] Department of the Navy ,Southern Division, Naval Facilities Engineering Command, Statement of Work, A-E contract N62467-94-D-1146, 7 March 1995

[10] Department of the Navy, Atlantic Division, Naval Facilities Engineering Command, Functional Analysis Concept Development Instruction, May 25, 2000

[11] U.S. Army Corps of Engineer's Office of the Chief Engineer's Value Engineering Study Team OVEST Brochure, date unknown

[12] E-mail interview with Mr. David Wood, PPI Construction Management, June 2000

BIBLIOGRAPHY

Donald S. Barrie, Boyd C. Paulson, Professional Construction Management, Third Edition, McGraw-Hill ,1984

Michael Brassard and Diane Ritter, The memory Jogger II, Goal/QPC, 1994

U.S. Army Corps of Engineers Value Engineering Officer's Handbook, March 1997

Holder Construction Company's General Qualifications for the Masters Research Project, June 29, 2000

Metric Constructors' Marketing Brochure, 2000

E-mail interview with Mr. Bill Bogues, Atlantic Division, Naval Facilities Engineering Command, June, 2000

E-mail interview with Mr. Rick Furr, Metric Constructors, May-June, 2000

Telephone interview with Mr. Virgil Svendsen, Southern Division, Naval Facilities Engineering Command on May 25, 2000

Telephone interview with Mr. Pat Haley, Combined Acquisition Office Jacksonville, Southern Division, Naval Facilities Engineering Command on May 24, 2000

Telephone interview with Mr. Robert Salmon, Holder Construction Company on June 23, 2000

APPENDIX A

Examples of Accepted VE proposals

CORROSION CONTROL HANGAR
NAS KINGSVILLE, TX

AS DESIGNED: CEILING HEIGHT IN HANGAR OF 21'-7"

VE PROPOSAL: LOWER CEILING HEIGHT ALONG SIDEWALLS TO 14'-0"

SAVINGS: $187,000 INITIAL
$ 61,000 LIFE CYCLE

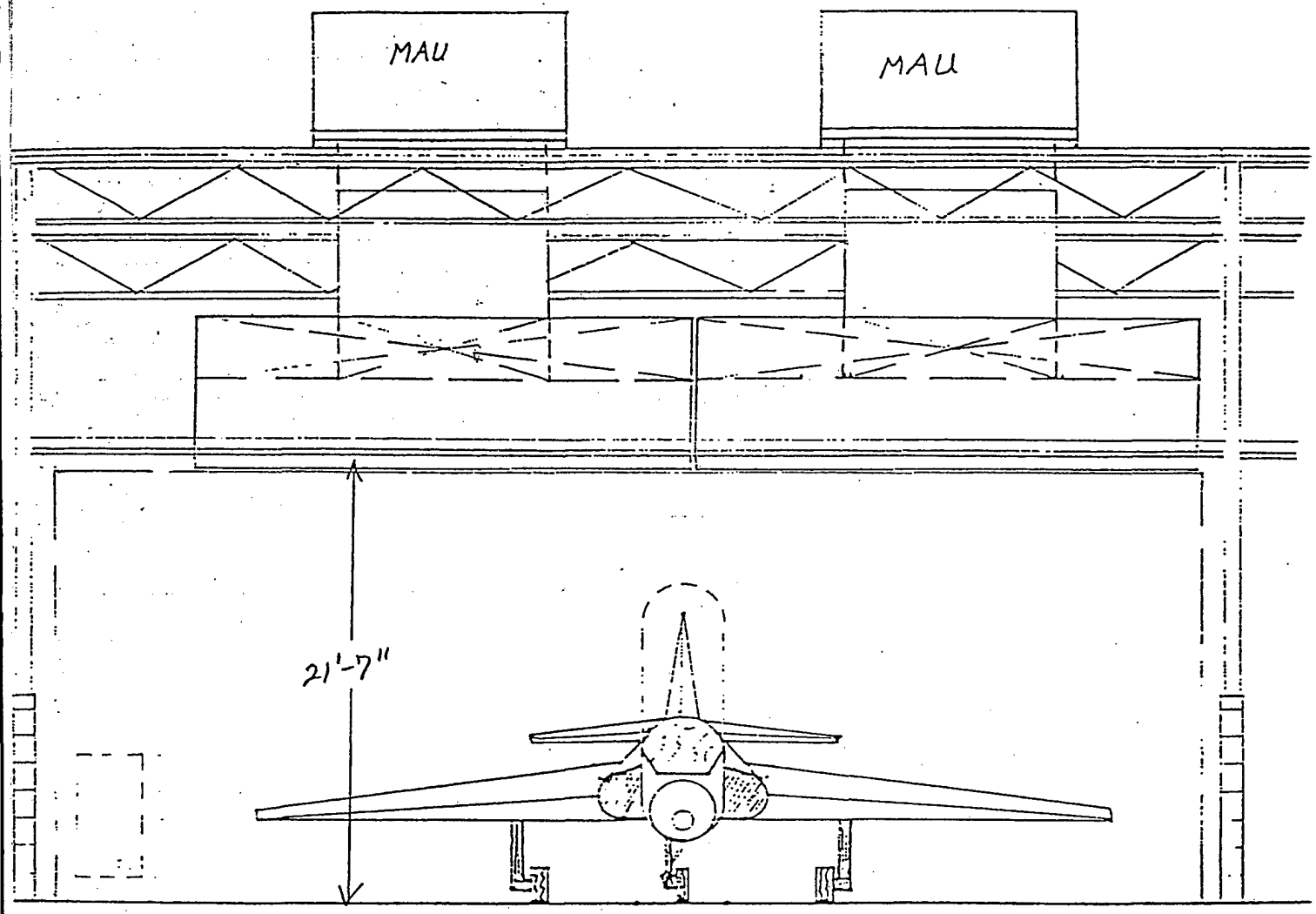

AS DESIGNED

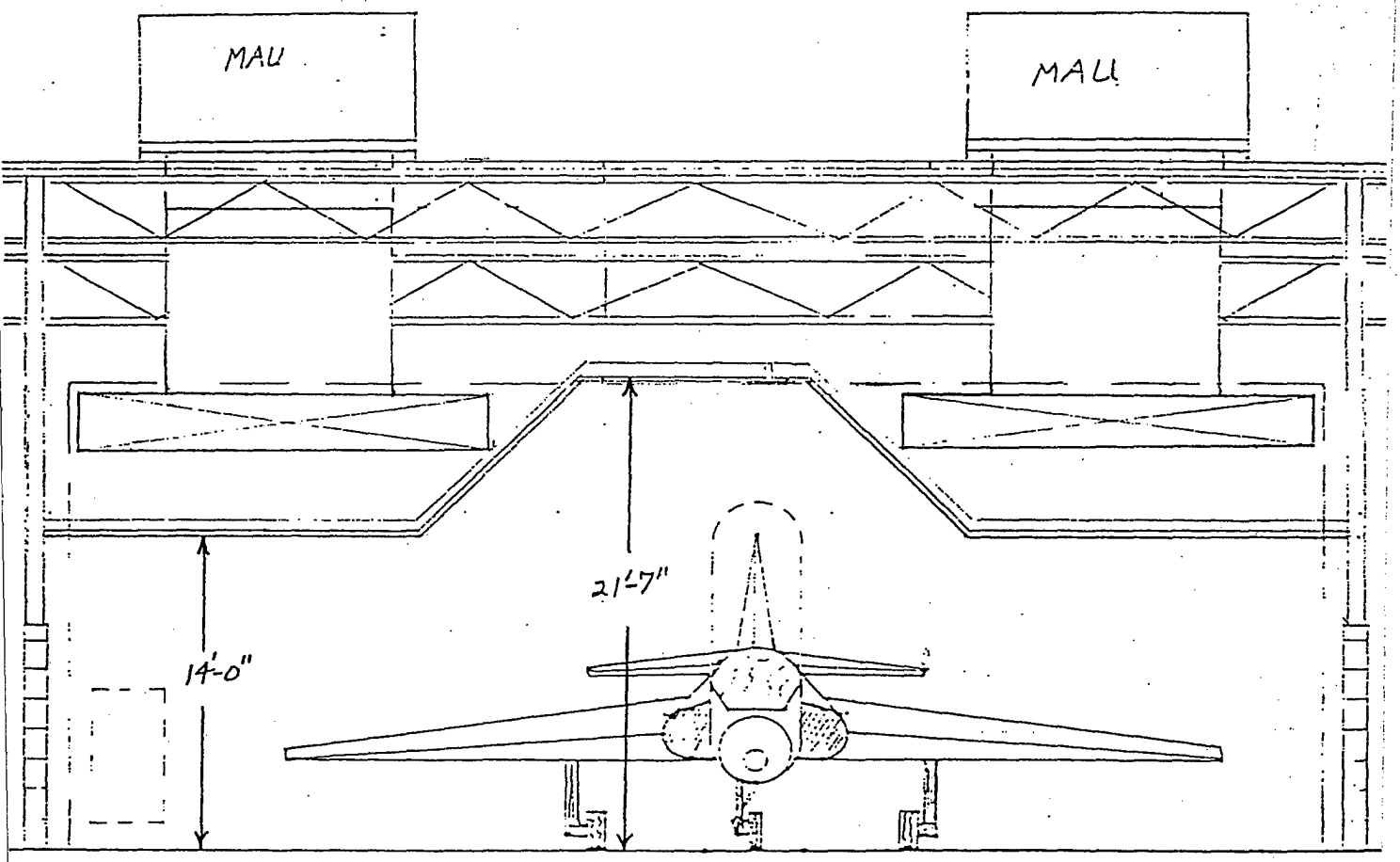

VE PROPOSAL

CORROSION CONTROL HANGAR
NAS KINGSVILLE, TX

AS DESIGNED: 24 - 400 WATT METAL HALIDE LIGHT FIXTURES

VE PROPOSAL: 9 - 1000 WATT METAL HALIDE LIGHT FIXTURES

SAVINGS: $45,000 INITIAL
$23,000 LIFE CYCLE

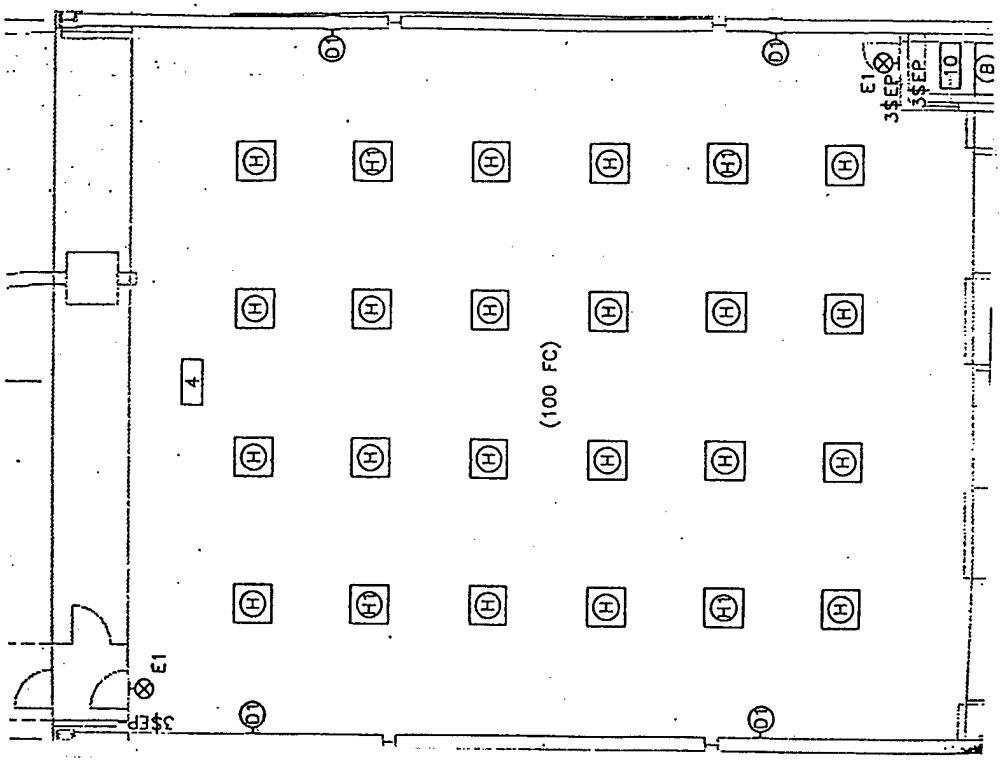

AS DESIGNED

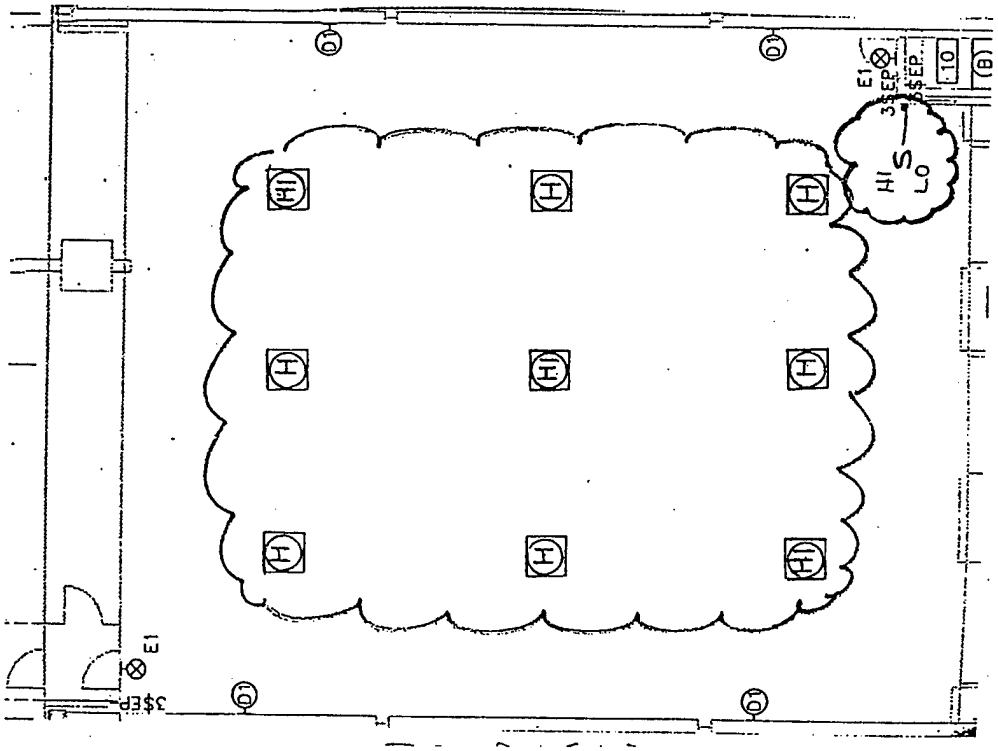

VE PROPOSAL

CORROSION CONTROL HANGAR
NAS KINGSVILLE, TX

AS DESIGNED: 11 INCH THICK CONCRETE FLOOR SLAB

VE PROPOSAL: 9 INCH SLAB FOR CENTER SECTION & 6 INCH AT PERIMETER

SAVINGS: $18,000

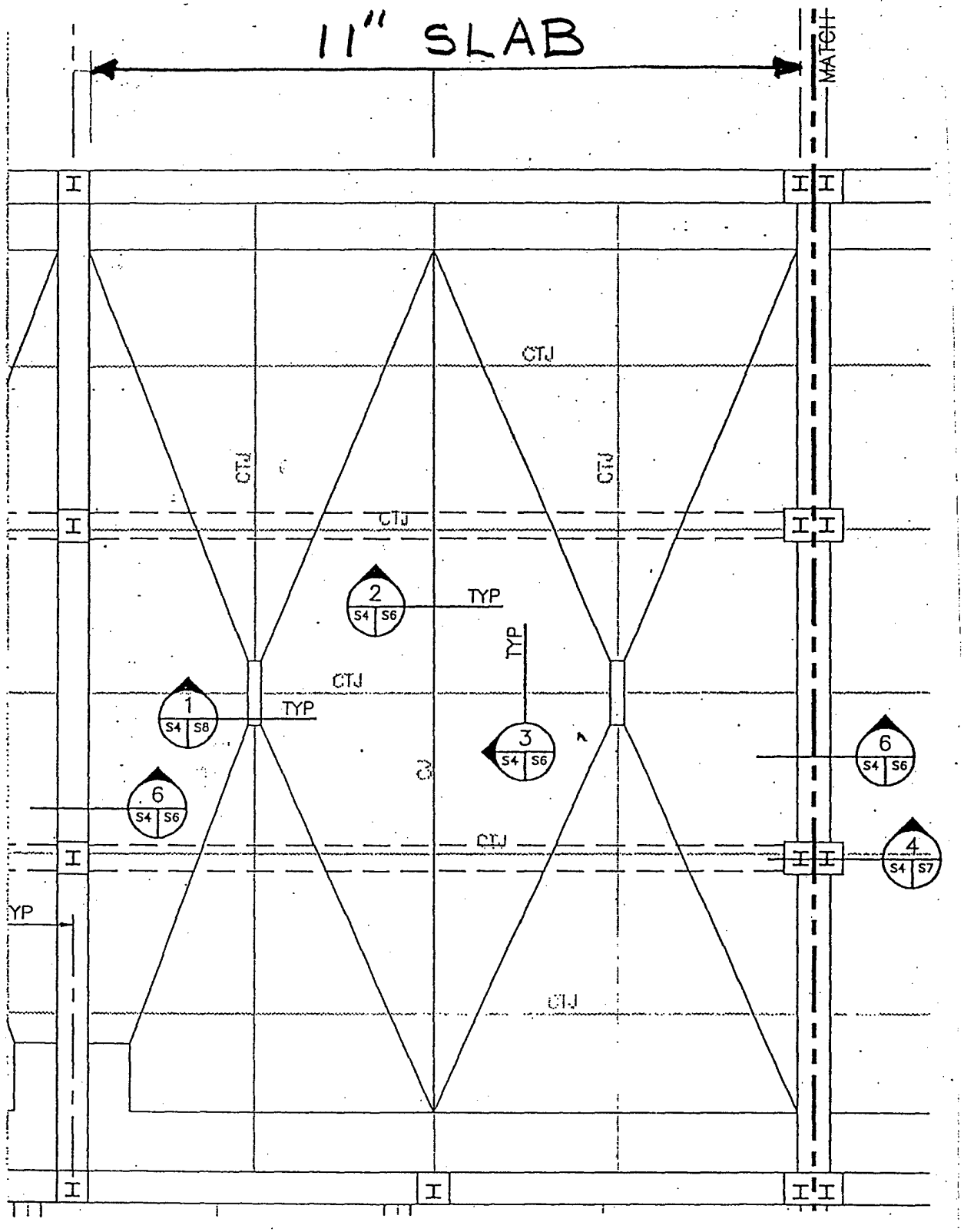
11" SLAB
MATCH
CTJ
CTJ
CTJ
CTJ
CTJ
CTJ
CTJ
TYP
TYP
TYP
TYP
2
S4 S6
1
S4 S8
3
S4 S6
6
S4 S6
6
S4 S6
4
S4 S7

AS DESIGNED

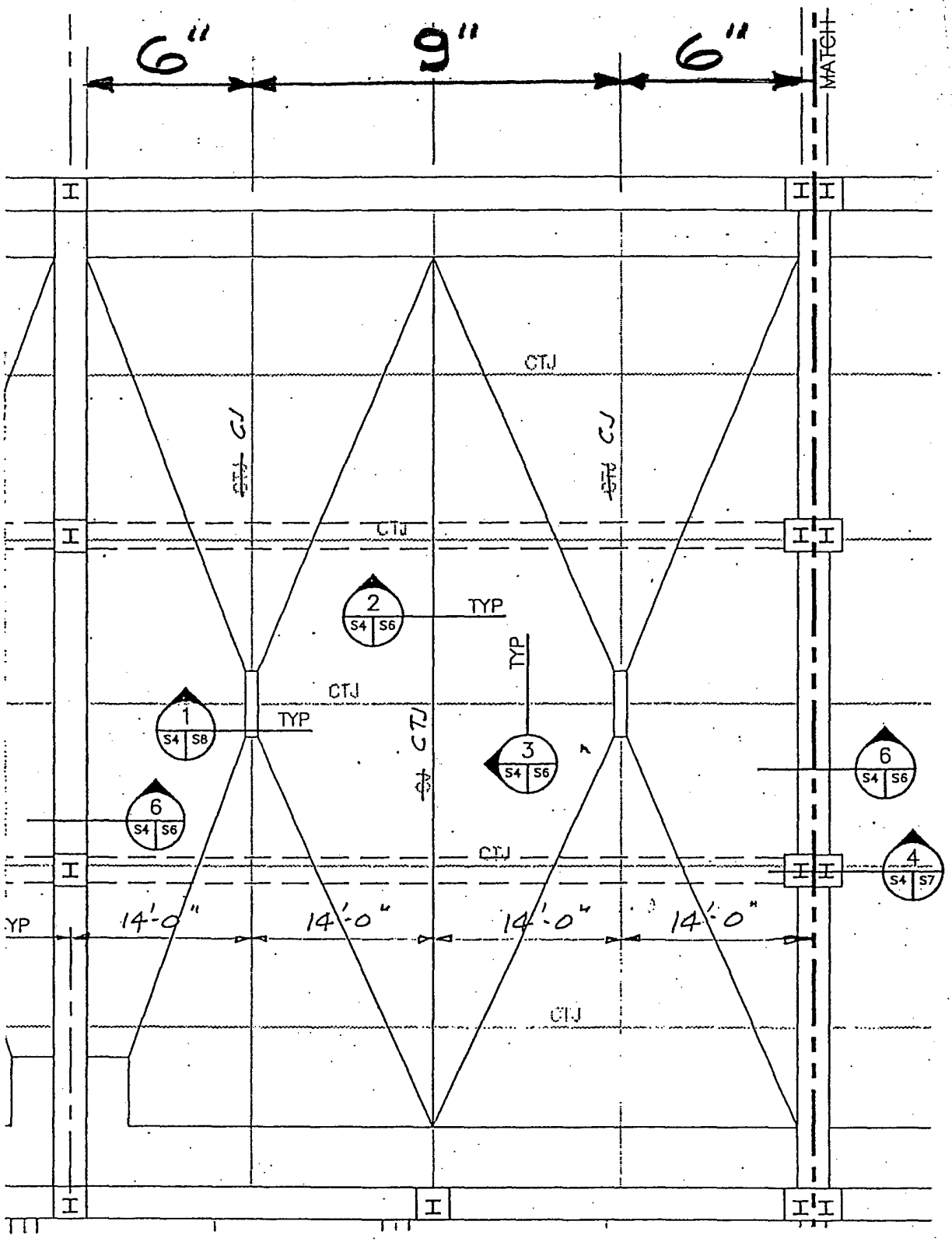
6"
9"
6"
MATCH
CTJ
CTJ
CTJ
CTJ
CTJ
CTJ
CTJ
CTJ
2
S4 S6
TYP
TYP
1
S4 S8
TYP
3
S4 S6
6
S4 S6
6
S4 S6
4
S4 S7
14'-0"
14'-0"
14'-0"
14'-0"

VE PROPOSAL

RESERVE CENTER
HOUSTON, TX

AS DESIGNED: VARIABLE AIR VOLUME HVAC SYSTEM

VE PROPOSAL: CONSTANT VOLUME HVAC SYSTEM

SAVINGS: $98,000

RESERVE CENTER
HOUSTON, TX

AS DESIGNED: EXTERIOR WALL HEIGHT OF 74'-8"

VE PROPOSAL: EXTERIOR WALL HEIGHT OF 72'-0"

SAVINGS: $34,000

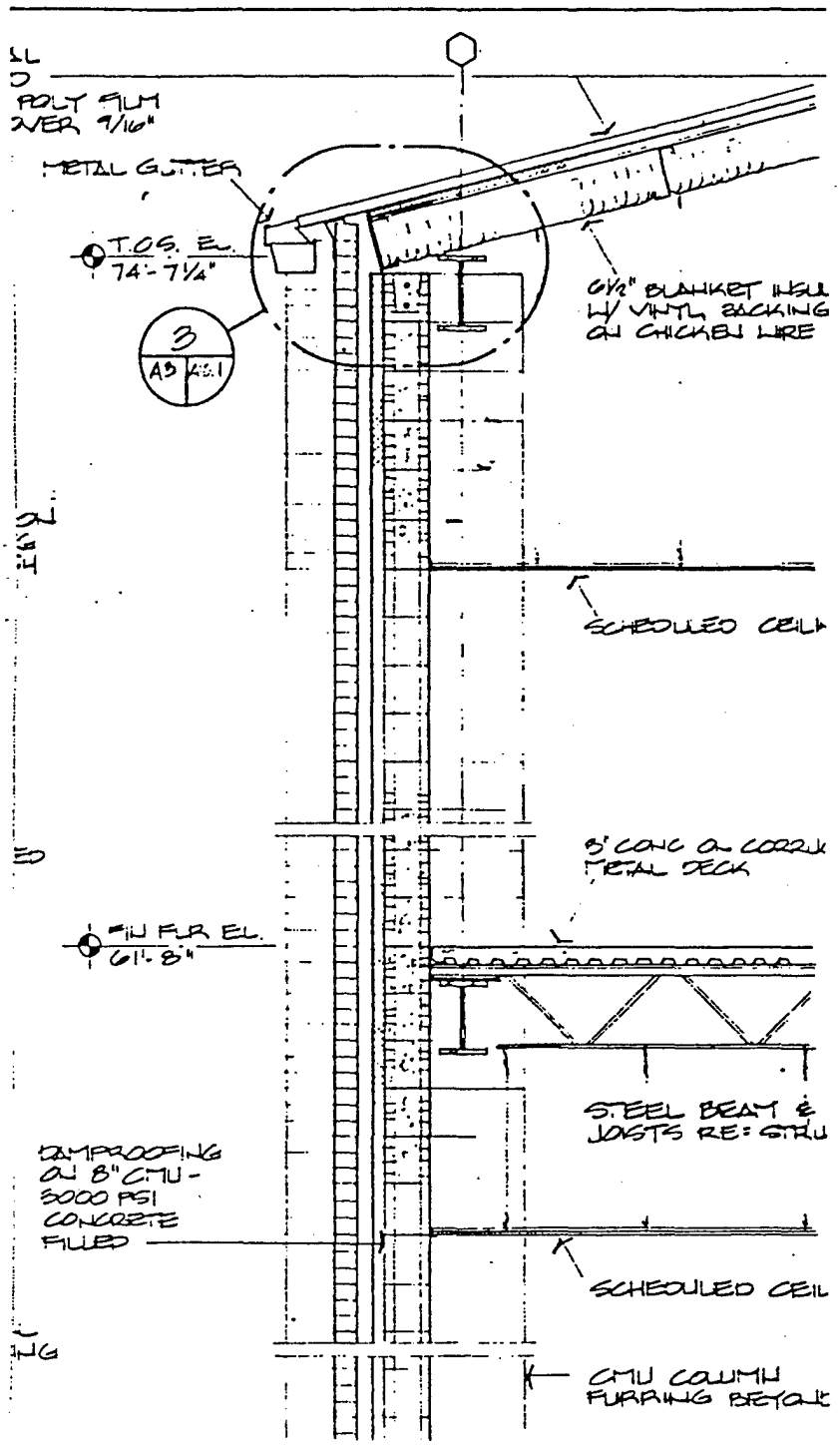
POLY FILM
OVER 9/16"
METAL GUTTER
T.O.S. EL.
74'-7 1/4"
3
A3
6 1/2" BLANKET INSUL
W/ VINYL BACKING
ON CHICKEN WIRE
SCHEDULED CEIL
3" CONC ON CORRU
METAL DECK
FIN FLR EL.
61'-8"
STEEL BEAM &
JOISTS RE: STRU
DAMPROOFING
ON 8" CMU -
3000 PSI
CONCRETE
FILLED
SCHEDULED CEIL
CMU COLUMN
FURRING BEYOND

AS DESIGNED

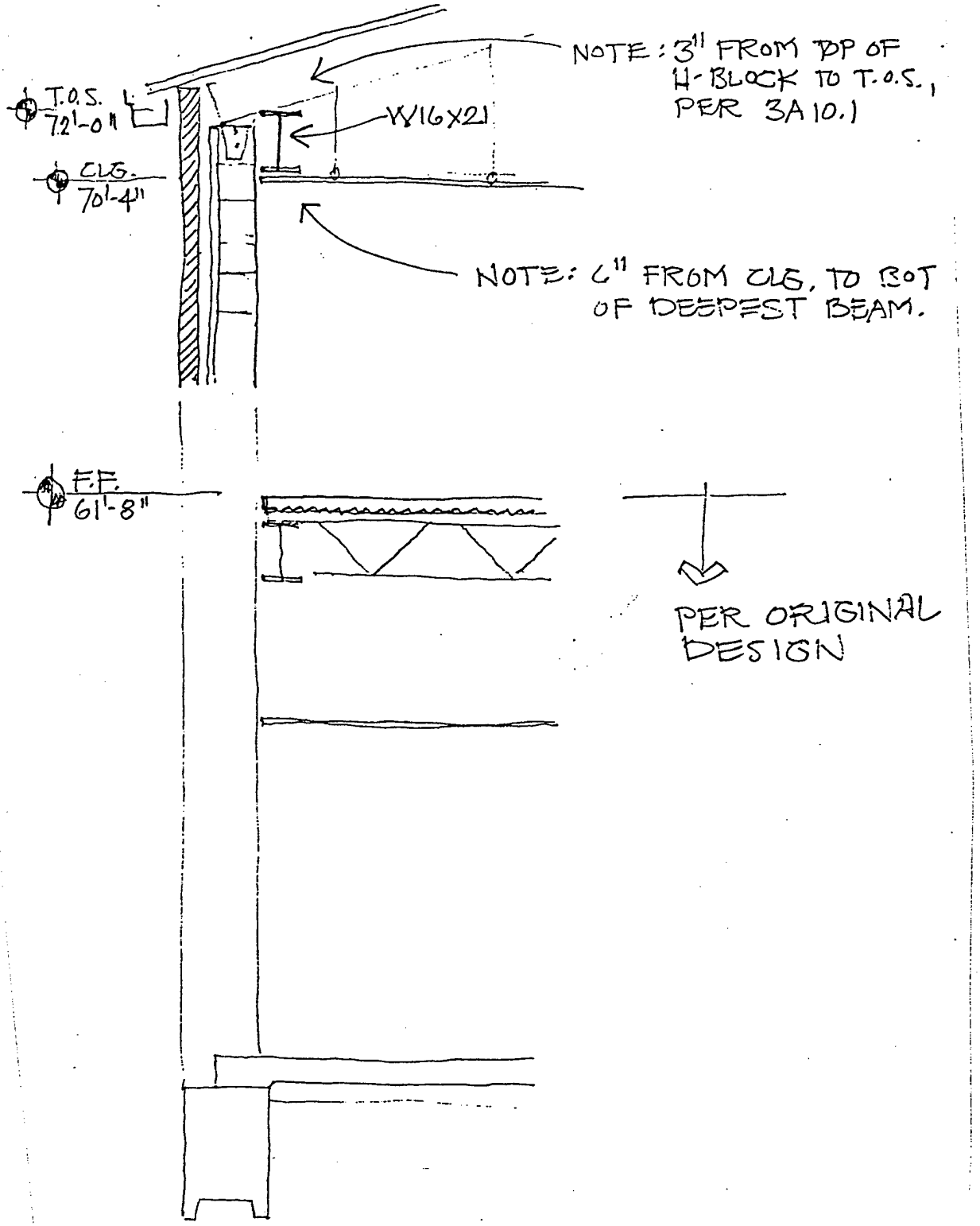
NOTE: 3" FROM TOP OF H-BLOCK TO T.O.S., PER 3A10.1
T.O.S. 72'-0"
W16X21
CLG. 70'-4"
NOTE: 6" FROM CLG. TO BOT OF DEEPEST BEAM.
F.F. 61'-8"
PER ORIGINAL DESIGN

VE PROPOSAL

RESERVE CENTER
HOUSTON, TX

AS DESIGNED: PARALLEL CAST IRON DOMESTIC AND FIRE WATER LINES

VE PROPOSAL: SINGLE PVC WATER LINE

SAVINGS: $24,000

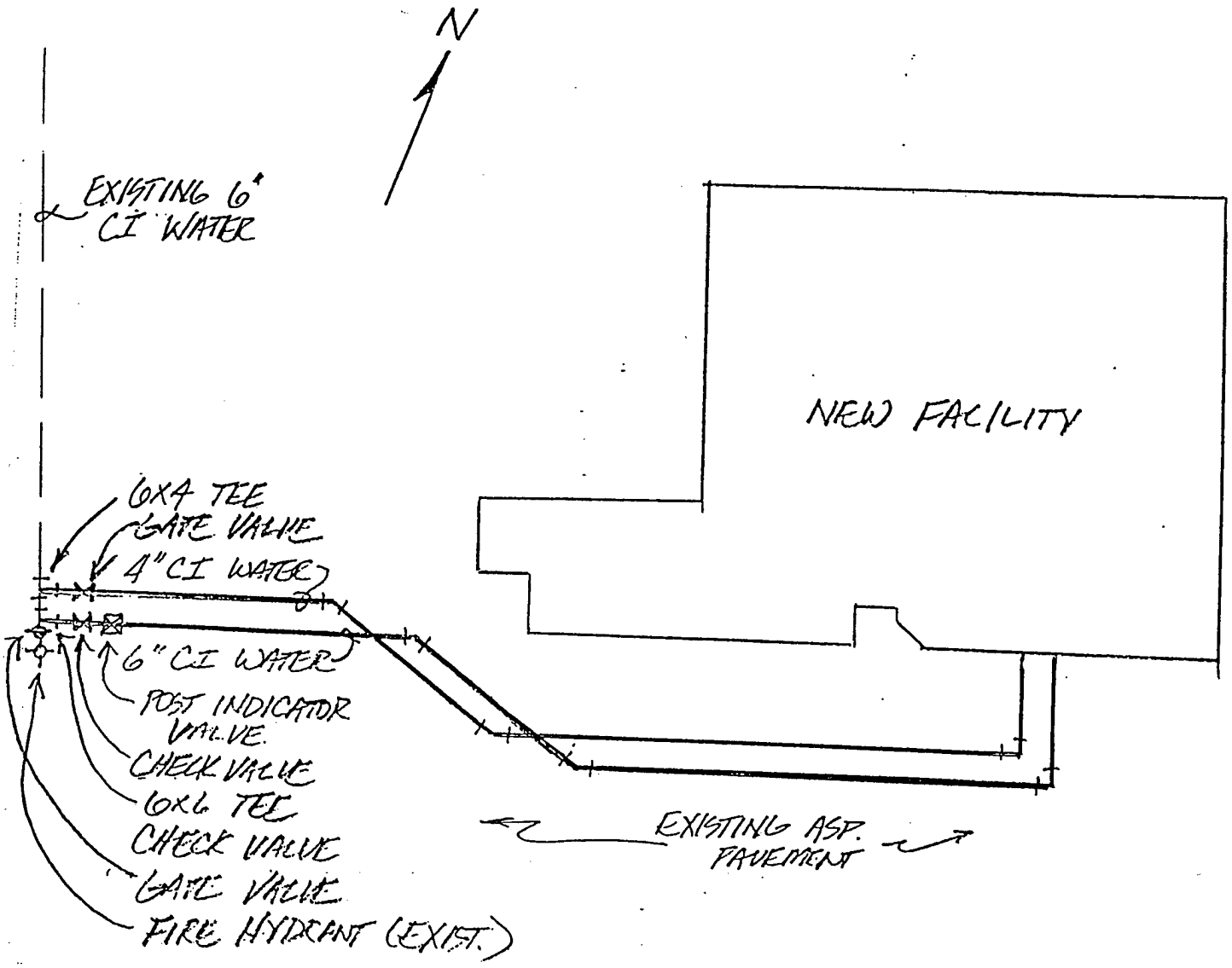
N
EXISTING 6" CI WATER
NEW FACILITY
6X4 TEE
GATE VALVE
4" CI WATER
6" CI WATER
POST INDICATOR VALVE
CHECK VALVE
6X6 TEE
CHECK VALVE
GATE VALVE
FIRE HYDRANT (EXIST.)
EXISTING ASP. PAVEMENT

AS DESIGNED

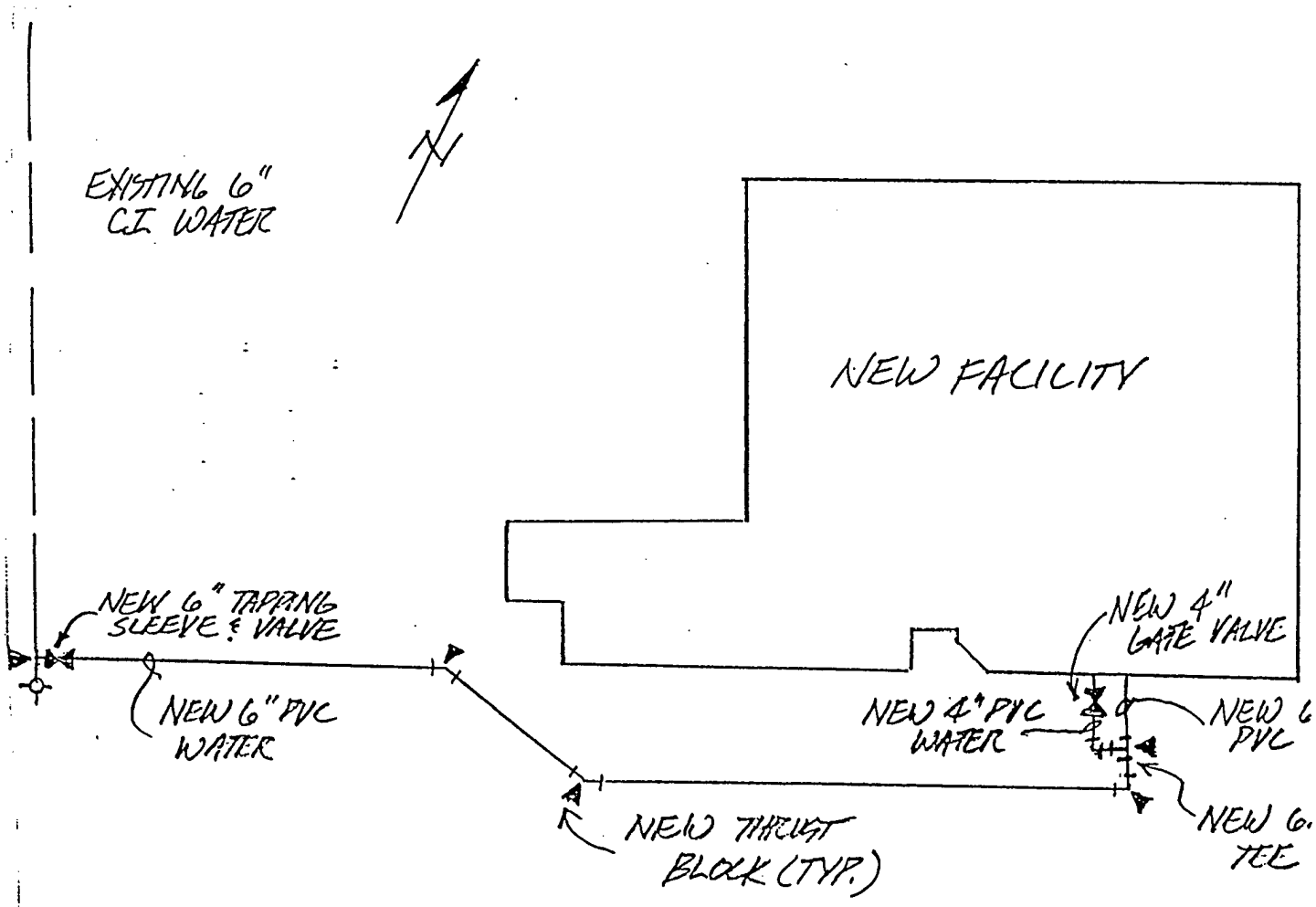
EXISTING 6" C.I. WATER
N
NEW FACILITY
NEW 6" TAPPING SLEEVE & VALVE
NEW 6" PVC WATER
NEW 4" GATE VALVE
NEW 4" PVC WATER
NEW 6 PVC
NEW THRUST BLOCK (TYP.)
NEW 6 TEE

VE PROPOSAL

FUEL TANKAGE
NAS PENSACOLA, FL

AS DESIGNED: SEPARATE STORM DRAINAGE SYSTEM FOR DIKED AREA AND PAVED AREA

VE PROPOSAL: COMBINE STORM DRAINAGE SYSTEMS

SAVINGS: $52,000

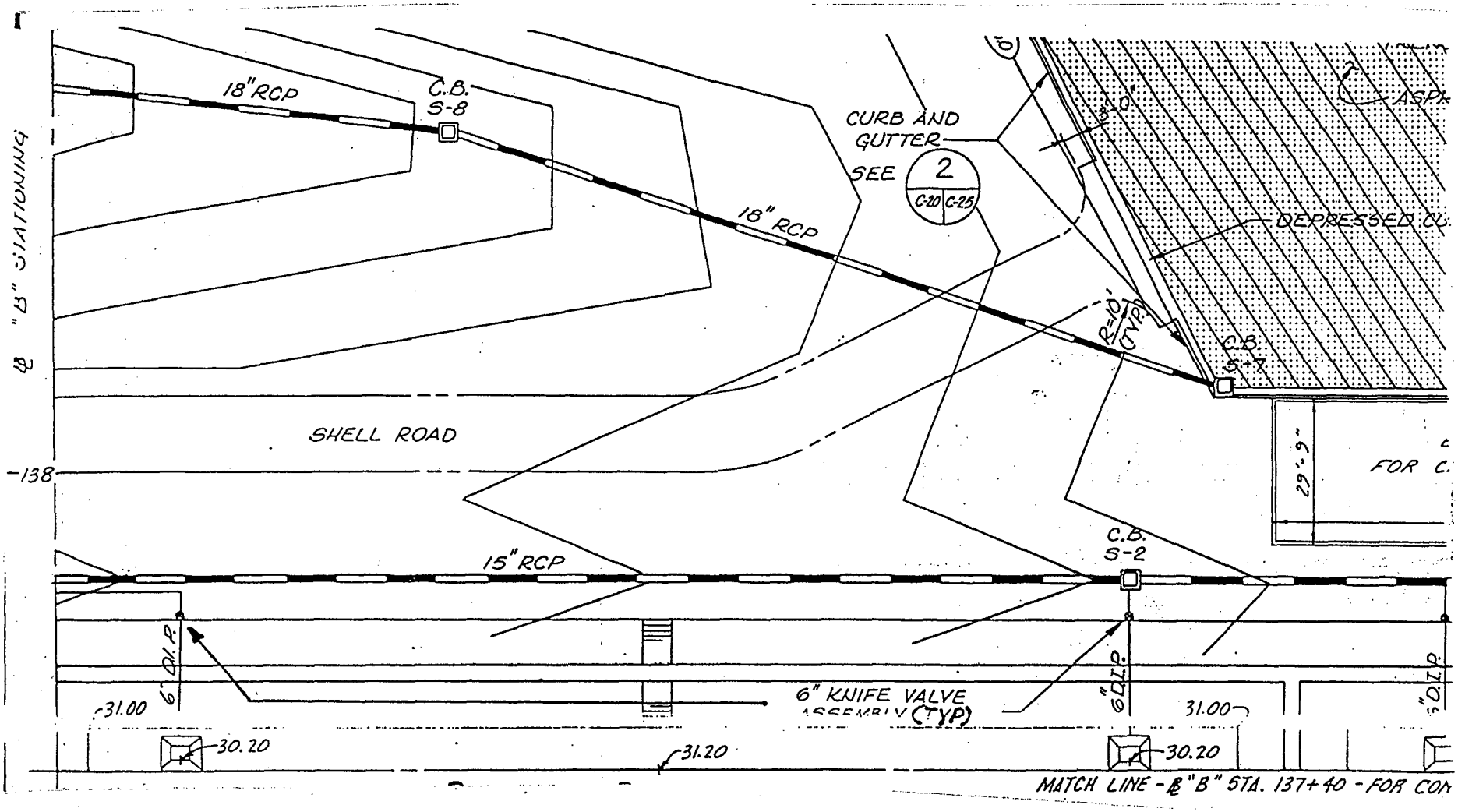
18" RCP
C.B. S-8
18" RCP
CURB AND GUTTER
SEE 2
C-20 C-25
DEPRESSED CU
ASPH
R=10' (TYP)
C.B. S-7
SHELL ROAD
138
29'-9"
FOR C
15" RCP
C.B. S-2
6" D.I.P.
6" D.I.P.
6" D.I.P.
6" KNIFE VALVE ASSEMBLY (TYP)
31.00
31.00
30.20
31.20
30.20
MATCH LINE - ℄ "B" STA. 137+40 - FOR CON

AS DESIGNED

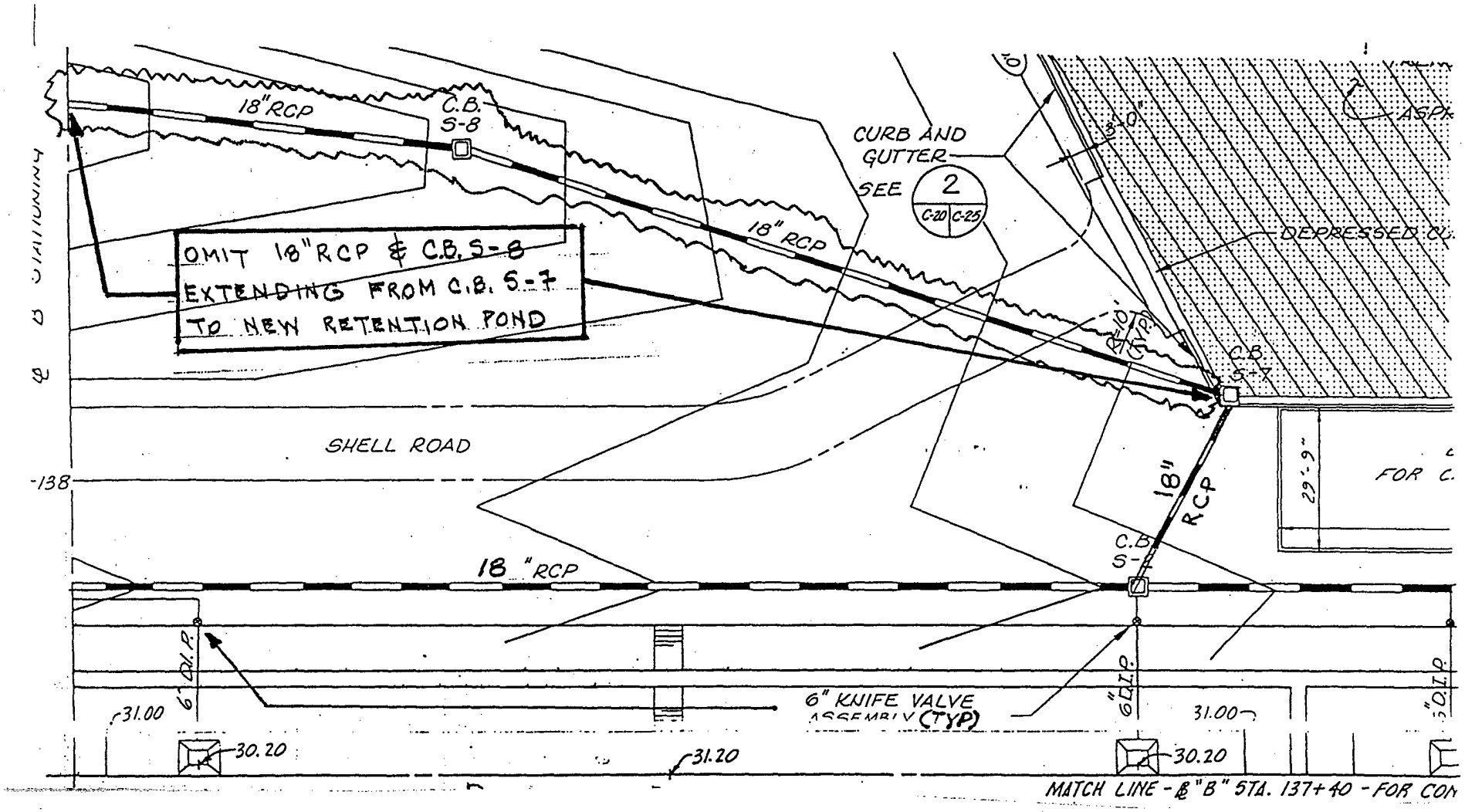
18" RCP
C.B. S-8
OMIT 18" RCP & C.B. S-8
EXTENDING FROM C.B. S-7
TO NEW RETENTION POND
CURB AND GUTTER
SEE 2
C-20 C-25
3'-0"
DEPRESSED CU
18" RCP
C.B. S-7
SHELL ROAD
-138
18" RCP
29'-9"
FOR C
18" RCP
C.B. S-
6" D.I.P.
6" KNIFE VALVE
ASSEMBLY (TYP)
31.00
30.20
31.20
30.20
31.00
MATCH LINE - ℄ "B" STA. 137+40 - FOR CON

VE PROPOSAL

FUEL TANKAGE
NAS PENSACOLA, FL

AS DESIGNED: 15KV UNDERGROUND ELECTRICAL LINE

VE PROPOSAL: 15KV OVERHEAD ELECTRICAL LINE

SAVINGS: $98,000

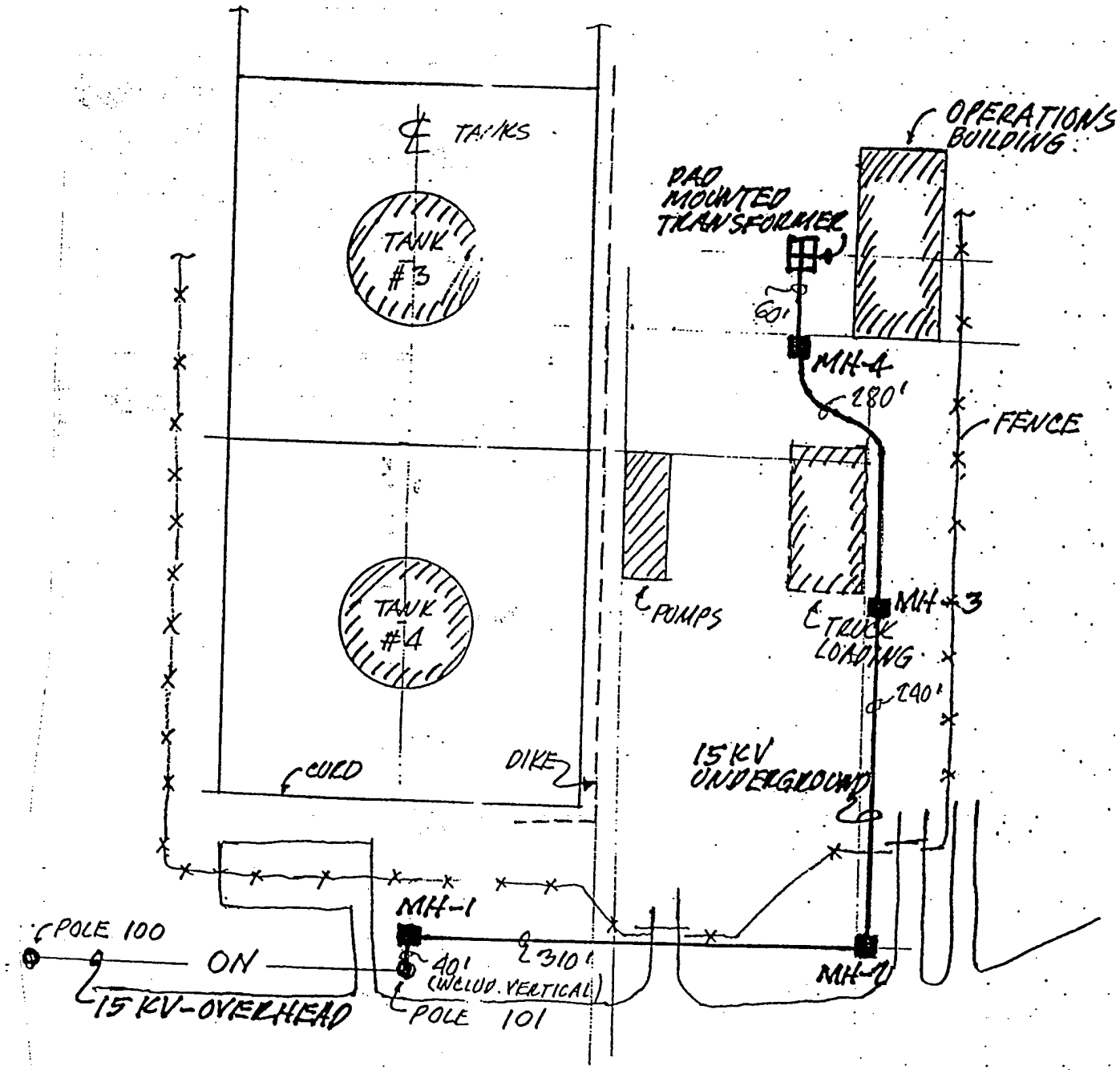
℄ TANKS
TANK #3
TANK #4
OPERATIONS BUILDING
PAD MOUNTED TRANSFORMER
60'
MH-4
280'
FENCE
℄ PUMPS
MH-3
℄ TRUCK LOADING
240'
15 KV UNDERGROUND
CURB
DIKE
MH-1
POLE 100
ON
15 KV-OVERHEAD
40'
(INCLUD. VERTICAL)
℄ 310'
POLE 101
MH-2

AS DESIGNED

FUEL TANKAGE
NAS PENSACOLA, FL

AS DESIGNED: DIKE FREEBOARD OF 1 FT

VE PROPOSAL: FREEBOARD REDUCED TO THAT REQ'D TO CONTAIN 100 YR, 2 HOUR RAINFALL (6")

SAVINGS: $15,000

* REQUIRED NAVFAC WAIVER OF DM - 22

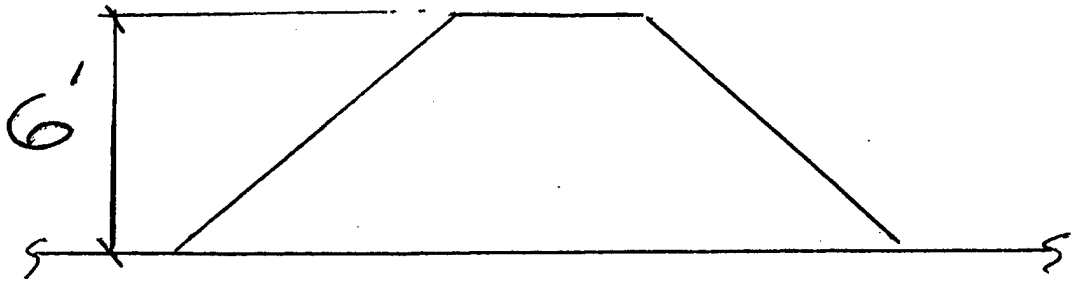

AS DESIGNED

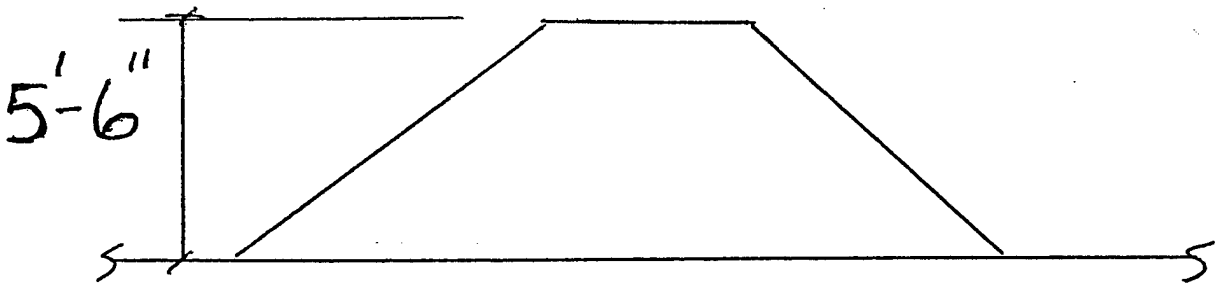

VE PROPOSAL

FUEL TANKAGE
NAS PENSACOLA, FL

AS DESIGNED: TOP WIDTH OF DIKE = 3 FT

VE PROPOSAL: TOP WIDTH OF DIKE = 2 FT

SAVINGS: $11,000

* REQUIRED NAVFAC WAIVER OF DM - 22

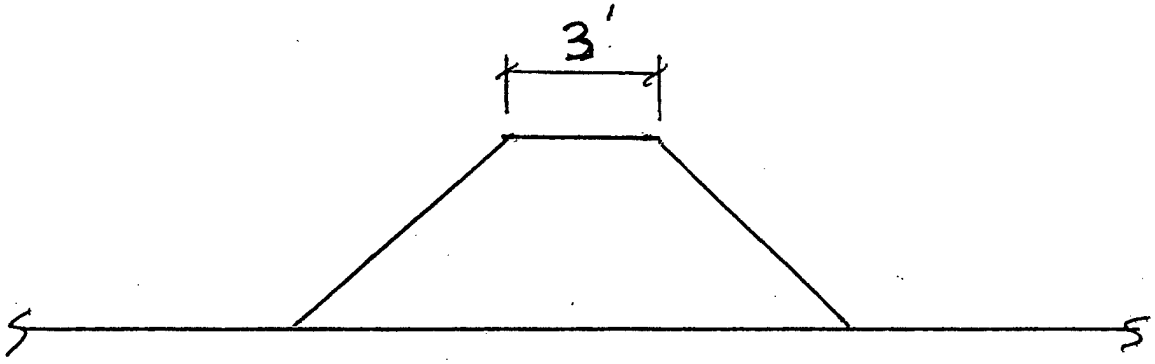

AS DESIGNED

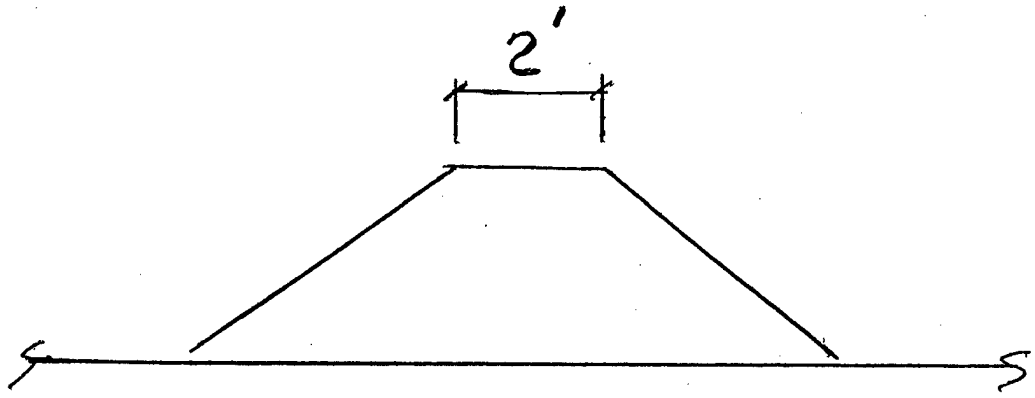

VE PROPOSAL

FUEL TANKAGE
NAS PENSACOLA, FL

AS DESIGNED: STONE COLUMNS FOR TANK FOUNDATION

VE PROPOSAL: SURCHARGE IN LIEU OF STONE COLUMNS

SAVINGS: $352,000

FUEL TANKAGE
NAS PENSACOLA, FL

AS DESIGNED: SURCHARGE SOIL FOR OPERATIONS BUILDING

VE PROPOSAL: CONVENTIONAL COMPACTION ILO SURCHARGE

SAVINGS: $35,000

250 UNITS OF FAMILY HOUSING
NSB KINGS BAY, GA

AS DESIGNED: SEPARATE WATER HEATERS FOR EACH APARTMENT

VE PROPOSAL: ONE WATER HEATER FOR TWO APARTMENTS

SAVINGS: $162,000

250 UNITS OF FAMILY HOUSING
NSB KINGS BAY, GA

AS DESIGNED: 6 INCH CONCRETE DRIVEWAYS

VE PROPOSAL: 4 INCH CONCRETE DRIVEWAYS

SAVINGS: $22,000

250 UNITS OF FAMILY HOUSING
NSB KINGS BAY, GA

AS DESIGNED: SLAB ON GRADE CONSTRUCTION AT VARYING ELEVATIONS

VE PROPOSAL: LOWER FLOOR ELEVATIONS TO REDUCE FILL BY 33,500 CY

SAVINGS: $170,000

250 UNITS OF FAMILY HOUSING
NSB KINGS BAY, GA

AS DESIGNED: METAL ELECTRICAL OUTLET BOXES THROUGHOUT

VE PROPOSAL: PVC OUTLET BOXES IN SELECTED AREAS

SAVINGS: $30,000

Thirty-one (31) of the original fifty-seven (57) proposals were accepted (or modified) with a projected savings of $1,146,266 or 35% of the potential initial savings. The acceptance rate was 54% of the proposal considered.

The final report contains changes from Report Number 1 on the following pages:

Executive Report	Page 2
Detailed List of Proposal by Discipline	Page 4-11
Summary of Proposals by Discipline	Page 12

Should you have any questions on the above, do not hesitate to call.

Sincerely,

U.S. COST INCORPORATED

Wade Martin / sic.

Wade Martin
Team Coordinator

WM/ak

Value Engineering Proposal Summary

BEQ-PHASE III

VE Item No.	VE Proposal	Potential Savings			Implemented Savings			Comments/Justification
		First Cost Savings	Operating Cost Savings	Total Potential Savings	First Cost Savings	Operating Cost Savings	Total Implemented Savings	
A-1.000	REDUCE VOLUME OF CORE BUILDING LAUNDRY.	$14,276	$0	$14,276	$14,276	$0	$14,276	
A-2.000	USE FIBERGLASS SHOWER STALLS INSTEAD OF CERAMIC TILE.	$65,520	$0	$65,520	$65,520	$0	$65,520	WILL BE AUTHORIZED AS A CONTRACTOR OPTION.
A-3.000	DESIGN SUGGESTION. EXPLORE RAIL DESIGN ALTERNATES.	$0	$0	$0	$0	$0	$0	WILL BE FURTHER STUDIED AS THE DESIGN PROGRESSES.
A-4.000	SUBSTITUTE E.I.F.S. FOR SPLIT FACE EXTERIOR.	$225,300	$0	$225,300	$0	$0	$0	WILL BE FURTHER STUDIED AS THE DESIGN PROGRESSES.
A-5.000	USE SOME DRYWALL/METAL STUD PARTITION WALLS.	$83,646	$0	$83,646	$83,646	$0	$83,646	A/E MAY ALSO INVESTIGATE USE OF 20 GUAGE, 2-1/2" WALL FRAMING.
A-6.000	DELETE CERAMIC TILE WAINSCOT IN BATH AREA.	$55,666	$0	$55,666	$40,000	$0	$40,000	DESIGN TO RETAIN MUD SET SHOWER STALL CERAMIC FLOORING.
A-7.000	USE 1/2" DRYWALL OVER C.M.U.'S ON INTERIOR WALLS.	$121,081	$0	$121,081	$60,000	$0	$60,000	
A-8.000	DELETE PARAPET WALL AND FLASHING AT CORE BUILDING.	$4,802	$0	$4,802	$4,802	$0	$4,802	
A-9.000	CHANG STANDING SEAM METAL ROOF AT CORE BUILDING TO ASPHALT SHINGLES.	$69,036	$0	$69,036	$69,036	$0	$69,036	

Value Engineering Proposal Summary

BEQ-PHASE III

VE Item No.	VE Proposal	Potential Savings			Implemented Savings			Comments/Justification
		First Cost Savings	Operating Cost Savings	Total Potential Savings	First Cost Savings	Operating Cost Savings	Total Implemented Savings	
A-10.000	DESIGN SUGGESTION. DELETE REDESIGN OF PORTICO ON BUILDING "B".	$0	$0	$0	$0	$0	$0	
A-11.000	USE SIMULATED STONE IN LIEU OF CAST STONE WINDOW SILL IN BEDROOMS.	$26,191	$0	$26,191	$26,191	$0	$26,191	
A-12.000	REDUCE FLOOR TO CEILING HEIGHT BY 8" PER FLOOR.	$207,694	$0	$207,694	$207,694	$0	$207,694	
A-13.000	DESIGN SUGGESTION. DESIGN THREE (3) LARGER BUILDINGS INSTEAD OF FOUR (4) OR FIVE (5) SMALLER BUILDINGS.	$0	$0	$0	$0	$0	$0	REVISED DESIGN POSSIBILITIES TO BE FURTHER STUDIED BY SOUTHDIV AND THE A/E.
A-14.000	EXCHANGE BUILT-IN METAL FRAME AND WOOD DOOR FOR PRE-HUNG DOORS.	$42,336	$0	$42,336	$42,336	$0	$42,336	
A-15.000	DELETE DOOR AND FRAME BETWEEN VANITY AREA AND LIVING AREA.	$108,187	$0	$108,187	$0	$0	$0	TO BE FURTHER STUDIED AS THE DESIGN PROGRESSES.
A-16.000	DELETE CAST STONE BASE ON LIGHT FIXTURES AT EXTERIOR BALCONY.	$4,500	$0	$4,500	$0	$0	$0	FOR FURTHER STUDY.
A-,17.000	LOWER CEILING IN CORE BUILDING TV/LOUNGE.	$3,350	$0	$3,350	$3,350	$0	$3,350	
	Totals for " A " Proposals				**$616,851**	**$0**	**$616,851**	

Value Engineering Proposal Summary

BEQ-PHASE III

VE Item No.	VE Proposal	Potential Savings: First Cost Savings	Potential Savings: Operating Cost Savings	Potential Savings: Total Potential Savings	Implemented Savings: First Cost Savings	Implemented Savings: Operating Cost Savings	Implemented Savings: Total Implemented Savings	Comments/Justification
S-1.000	SUBSTITUTE GYP. BOARD FOR 8" PRECAST CEILINGS OVER THIRD STORY HEATED SPACES AND CAST IN PLACE CEILING OVER THIRD STORY BALCONIES.	$305,520	$0	$305,520	$0	$0	$0	FOR FURTHER STUDY. PRECAST AND CAST IN PLACE CONCRETE ELEMENTS CURRENTLY USED AS A STRUCTURAL DIAPHRAGM.
S-2.000	RAISE GRADE BEAMS AND POUR GRADE BEAMS MONOLITHIC WITH FIRST FLOOR SLABS.	$93,238	$0	$93,238	$0	$0	$0	FOR FURTHER STUDY.
S-3.000	ELIMINATE FORMED CONCRETE BEAMS OVER WALLS AND PROVIDE CONCRETE MASONRY BOND BEAMS.	$115,814	$0	$115,814	$0	$0	$0	FOR FURTHER STUDY.
S-4.000	CHANGE TYPICAL 8" HOLLOW CORE, FLOOR SLABS AND THIRD STORY CEILING TO 4" HOLLOW CORE SLABS.	$78,650	$0	$78,650	$0	$0	$0	TO BE STUDIED IN CONJUNCTION WITH THE STUDY ON PROPOSAL S-1.0
S-5.000	CHANGE TYPICAL 8" HOLLOW CORE SLABS AND 2" TOPPINGS TO 6" CAST-IN-PLACE CONCRETE SLABS.	$54,637	$0	$54,637	$0	$0	$0	TO BE FURTHER STUDIED IN CONJUNCTION WITH PROPOSALS S-1.0 AND S-4.0.
S-6.000	CHANGE TYPICAL 8" HOLLOW CORE SLABS AND 2" TOPPINGS TO STEEL BAR JOIST/METAL DECK SYSTEMS WITH CONCRETE TOPPINGS.	$207,724	$0	$207,724	$0	$0	$0	TO BE FURTHER STUDIED IN CONJUNCTION WITH PROPOSALS S-1.0, S-4.0 AND S-6.0
S-7.000	DESIGN SUGGESTION. PROVIDE WOOD ROOF TRUSSES IN LIEU OF THE METAL PURLIN SYSTEM.	$0	$0	$0	$0	$0	$0	TO BE FURTHER STUDIED BY THE DESIGN A/E.

Value Engineering Proposal Summary

BEQ-PHASE III

VE Item No.	VE Proposal	Potential Savings: First Cost Savings	Potential Savings: Operating Cost Savings	Potential Savings: Total Potential Savings	Implemented Savings: First Cost Savings	Implemented Savings: Operating Cost Savings	Implemented Savings: Total Implemented Savings	Comments/Justification
S-8.000	DESIGN SUGGESTION. USE 5" CAST-IN-PLACE CONCRETE SLABS AT EXTERIOR BALCONIES IN LIEU OF PRECAST SLABS AND CONCRETE TOPPINGS.	$0	$0	$0	$0	$0	$0	TO BE FURTHER STUDIED BY THE DESIGN A/E.
	Totals for " S " Proposals				$0	$0	$0	
M-1.000	RE-USE EXISTING 400 TON CHILLER.	$247,305	$0	$247,305	$0	$0	$0	WILL RECONSIDER IF BUDGET CONSTRAINTS PRECLUDE PURCHASE OF NEW EQUIPMENT.
M-2.000	REDUCE OUTSIDE AIR (OA) QUANTITY TO EACH LIVING UNIT FROM 100 CUBIC FEET PER MINUTE (CFM) TO 65 CFM.	$131,412	$29,274	$160,686	$131,412	$29,274	$160,686	1 CFM/SF IS THE NEW SOUTHDIV MINIMUM REQUIREMENT.
M-3.000	DELETE ALL FIRE DAMPERS PENETRATING THE SHAFT WALLS OF THE VERTICAL CHASE.	$49,968	$0	$49,968	$0	$0	$0	TO BE FURTHER STUDIED BY SOUTHDIV FIRE PROTECTION BRANCH.
M-4.000	REVISE THE AIR DISTRIBUTION IN EACH LIVING UNIT.	$22,800	$0	$22,800	$22,800	$0	$22,800	
M-5.000	DELETE BALANCING VALVES IN BYPASS LEG OF ALL HOT WATER AND CHILLED WATER COILS.	$22,467	$0	$22,467	$0	$0	$0	BALANCING VALVES IN BYPASS LEGS ARE A SOUTHDIV REQUIREMENT.
M-6.000	USE AN AIR COOLED CHILLER IN LIEU OF WATER COOLED CHILLER WITH AN ASSOCIATED COOLING TOWER.	$72,558	$0	$72,558	$0	$0	$0	TO BE FURTHER STUDIED AS THE DESIGN PROGRESSES.

Value Engineering Proposal Summary

BEQ-PHASE III

VE Item No.	VE Proposal	Potential Savings: First Cost Savings	Potential Savings: Operating Cost Savings	Potential Savings: Total Potential Savings	Implemented Savings: First Cost Savings	Implemented Savings: Operating Cost Savings	Implemented Savings: Total Implemented Savings	Comments/Justification
M-7.000	DESIGN SUGGESTION. DELETE SPRINKLERS THROUGHOUT AND USE A DRY-PIPE STANDPIPE SYSTEM.	$0	$0	$0	$0	$0	$0	TO BE FURTHER STUDIED BY THE SOUTHDIV FIRE PROTECTION BRANCH.
M-8.000	DESIGN SUGGESTION. REVIEW CALCULATIONS AND TYPICAL DETAILS.	$221	$0	$221	$0	$0	$0	
M-9.000	DESIGN SUGGESTION. USE FAN COIL UNITS IN LIEU OF A VAV SYSTEM. PROVIDE A DEDICATED 100% OUTSIDE AIR UNIT FOR SUPPLYING CONSTANT VENTILATION.	$0	$0	$0	$0	$0	$0	
M-10.000	DESIGN SUGGESTION. USE SCHEDULE 40 PVC PIPING FOR UNDERGROUND WATER AND SANITARY SEWER LINES.	$0	$0	$0	$0	$0	$0	
M-11.000	DESIGN SUGGESTION. DELETE THE REQUIREMENT FOR INSTALLING PRESSURE GAGES AND THERMOMETERS AT EACH COIL. PROVIDE P & T PLUGS INSTEAD.	$0	$0	$0	$0	$0	$0	
M-12.000	DESIGN SUGGESTION. DELETE THE REQUIREMENT FOR INSULATION ON DOMESTIC COLD WATER LINES AND EXHAUST AIR DUCTWORK WHERE CONDENSATION IS NOT BE EXPECTED.	$0	$0	$0	$0	$0	$0	

Value Engineering Proposal Summary

BEQ-PHASE III

VE Item No.	VE Proposal	Potential Savings: First Cost Savings	Potential Savings: Operating Cost Savings	Potential Savings: Total Potential Savings	Implemented Savings: First Cost Savings	Implemented Savings: Operating Cost Savings	Implemented Savings: Total Implemented Savings	Comments/Justification
M - 13.000	DESIGN SUGGESTION. USE PRE-ENGINEERED COMBINATION WASTE & VENT SYSTEM.	$0	$0	$0	$0	$0	$0	TO BE STUDIED FURTHER AS THE DESIGN PROGRESSES.
M - 14.000	USE A HIGH EFFICIENCY TWO (2) STAGE ABSORBER UTILIZIN HIGH TEMPERATURE HOT WATER (HTHW) FROM THE BASEWIDE SYSTEM ILO ELECTRICAL CHILLER.	$0	$0	$0	$0	$0	$0	TO BE FURTHER STUDIED AS THE DESIGN PROGRESSES.
M - 15.000	DESIGN SUGGESTION. USE A GAS ENGINE DRIVEN CHILLER IN LIEU OF AN ELECTRIC CHILLER.	$0	$0	$0	$0	$0	$0	TO BE FURTHER STUDIED.
M - 16.000	DESIGN SUGGESTION. USE PVC PIPE FOR CHILLED WATER PIPING ABOVE FINISHED GRADE.	$0	$0	$0	$0	$0	$0	
M - 17.000	DESIGN SUGGESTION. ALLOW THE USE OF SCHEDULE 10 PIPING ON ALL SIZES OF SPRINKLER PIPING.	$0	$0	$0	$0	$0	$0	
	Totals for " M " Proposals				$154,212	$29,274	$183,486	
E - 1.000	REDUCE NUMBER OF RECEPTACLES (120 VOLTS).	$50,148	$0	$50,148	$20,000	$0	$20,000	QUADRUPLEX BOXES AT A FEWER NUMBER OF LOCATIONS WILL BE INSTALLED.
E - 2.000	CHANGE INTERIOR LIGHTING FIXTURE TYPE AT VANITY.	$46,880	$0	$46,880	$0	$0	$0	TO BE STUDIED.

Value Engineering Proposal Summary

BEQ-PHASE III

VE Item No.	VE Proposal	Potential Savings: First Cost Savings	Potential Savings: Operating Cost Savings	Potential Savings: Total Potential Savings	Implemented Savings: First Cost Savings	Implemented Savings: Operating Cost Savings	Implemented Savings: Total Implemented Savings	Comments/Justification
E-3.000	COMBINE 277 AND 120 VOLT CABLES IN ONE (1) CONDUIT.	$274,236	$0	$274,236	$0	$0	$0	277 VOLT CIRCUITS HAVE BEEN ELIMINATED.
E-4.000	COMBINE TELEPHONE AND INTERCOM CABLES IN ONE (1) CONDUIT.	$274,236	$0	$274,236	$274,236	$0	$274,236	ALLOWED AS A CONTRACTOR OPTION.
E-5.000	ADD SUB PANELS ON SECOND AND THIRD FLOOR.	$8,935	$0	$8,935	$8,935	$0	$8,935	
E-6.000	DOWNSIZE 480/120-208 VOLT 3 PH TRANSFORMERS.	$3,532	$0	$3,532	$3,532	$0	$3,532	
E-7.000	DESIGN SUGGESTION. COMBINE FIRE PROTECTION SIGNAL CABLES IN A SINGLE CONDUIT.	$0	$0	$0	$0	$0	$0	
E-8.000	DESIGN SUGGESTION. REPLACE SEPARATELY WIRED INTERCOM SYSTEM WITH A COMBINED TELEPHONE/INTERCOM SYSTEM.	$0	$0	$0	$0	$0	$0	ACCEPTED PROPOSAL E-4.0.
E-9.000	DESIGN SUGGESTION. USE EMT INSTEAD OF RIGID CONDUIT WHENEVER POSSIBLE.	$0	$0	$0	$0	$0	$0	MAY NOT BE POSSIBLE IN SOME AREAS.
	Totals for " E " Proposals				**$306,703**	**$0**	**$306,703**	

Value Engineering Proposal Summary

BEQ-PHASE III

VE Item No.	VE Proposal	Potential Savings: First Cost Savings	Potential Savings: Operating Cost Savings	Potential Savings: Total Potential Savings	Implemented Savings: First Cost Savings	Implemented Savings: Operating Cost Savings	Implemented Savings: Total Implemented Savings	Comments/Justification
C-1.000	CONSIDER USING DIRECT BURY HOT AND CHILLED WATER PIPES IN PLACE OF UTILITY VAULT.	$92,485	$0	$92,485	$15,000	$0	$15,000	DIRECT BURY PIPES NOT ALLOWED. WILL RESIZE UTILITY VAULT TO MATCH NEED.
C-2.000	CHANGE LANDSCAPING TO VEGETATION THAT CAN BE SUSTAINED WITH LITTLE WATER UNTIL IT BECOMES ESTABLISHED.	$37,500	$0	$37,500	$37,500	$0	$37,500	
C-3.000	OMIT THREE (3) FOOT HIGH SCREEN WALL AT NORTHERN PARKING LOT.	$7,448	$0	$7,448	$0	$0	$0	WILL USE LANDSCAPING IN THAT AREA IN LIEU OF FENCING.
C-4.000	INCREASE PARKING LOT SIZE AND EFFICIENCY.	($27,574)	$0	($27,574)	$0	$0	$0	ARCHEOLOGICAL SITE IN THE AREA PRECLUDES REVISION.
C-5.000	REDUCE WIDTH OF PROPOSED SIDEWALKS.	$20,028	$0	$20,028	$4,000	$0	$4,000	SERVICE DRIVE WIDTH TO REMAIN AS DESIGNED.
C-6.000	ELIMINATE IRRIGATION SYSTEM.	$35,530	$0	$35,530	$12,000	$0	$12,000	IRRIGATION SYSTEM REDUCED IN EXTENT AND DROUGHT RESISTANT PLANTINGS USED EXTENSIVELY.
	Totals for " C " Proposals				$68,500	$0	$68,500	